1. Plan Commission Agenda

Documents:

01.06.2020 - PC AGENDA.PDF

1.I. Plan Commission Agenda Packet

Documents:

01.06.2020 - PC AGENDA PACKET.PDF

Plan Commission

Regular Meeting Notice and Agenda

Village of Cross Plains
2417 Brewery Road, PO Box 97
Cross Plains, WI 53528
(608) 798-3241

Monday, January 6, 2020
7:00 pm

I. Call to Order, Roll Call, and Pledge of Allegiance – Plan Commission

II. Public Comment – This is an opportunity for anyone to address the Plan Commission on any issue NOT on the current agenda. *Please observe the time limit of 3 minutes.* While the Plan Commission encourages input from residents, it may not discuss or act on any issue that is not duly noticed on the agenda.

III. General Business – Regular Meeting

1. Discussion and action regarding minutes of the regular meeting held December 3, 2019.

2. Public Hearing

    a. A request from Andrew and Emily Smith, for a Conditional Use Permit for Small Solar Energy System use located at 601 Dale Court, Cross Plains, WI.

3. Consideration of Conditional Use Permits for Small Solar Energy Systems.

    a. Accept and recommend the request from Andrew and Emily Smith, for a Conditional Use Permit for Small Solar Energy System use located at 601 Dale, Cross Plains, WI.

V. Adjournment

This meeting notice constitutes an official meeting of the above referenced group and was posted in accordance with all applicable laws related Open Meetings Law. It is possible that members of and possibly a quorum of members of other governmental bodies of the municipality may be in attendance at the above stated meeting to gather information. No action will be taken by any governmental body at the above stated meeting other than the governmental body specifically referred to above in this notice. Upon reasonable notice, efforts will be made to accommodate the needs of disabled individuals. For additional information or to request this service, contact the Village Hall at (608) 798-3241 or bchang@cross-plains.wi.us.

Plan Commission

Regular Meeting Notice and Agenda

Village of Cross Plains
2417 Brewery Road, PO Box 97
Cross Plains, WI 53528
(608) 798-3241

Monday, January 6, 2020
7:00 pm

I. Call to Order, Roll Call, and Pledge of Allegiance – Plan Commission

II. Public Comment – This is an opportunity for anyone to address the Plan Commission on any issue NOT on the current agenda. *Please observe the time limit of 3 minutes.* While the Plan Commission encourages input from residents, it may not discuss or act on any issue that is not duly noticed on the agenda.

III. General Business – Regular Meeting

1. Discussion and action regarding minutes of the regular meeting held December 3, 2019. Page 2

2. Public Hearing Page 7

    a. A request from Andrew and Emily Smith, for a Conditional Use Permit for Small Solar Energy System use located at 601 Dale Court, Cross Plains, WI.

3. Consideration of Conditional Use Permits for Small Solar Energy Systems.

    a. Accept and recommend the request from Andrew and Emily Smith, for a Conditional Use Permit for Small Solar Energy System use located at 601 Dale, Cross Plains, WI.

V. Adjournment

This meeting notice constitutes an official meeting of the above referenced group and was posted in accordance with all applicable laws related Open Meetings Law. It is possible that members of and possibly a quorum of members of other governmental bodies of the municipality may be in attendance at the above stated meeting to gather information. No action will be taken by any governmental body at the above stated meeting other than the governmental body specifically referred to above in this notice. Upon reasonable notice, efforts will be made to accommodate the needs of disabled individuals. For additional information or to request this service, contact the Village Hall at (608) 798-3241 or bchang@cross-plains.wi.us.

Plan Commission

Regular Meeting Minutes

Village of Cross Plains
2417 Brewery Road, PO Box 97
Cross Plains, WI 53528
(608) 798-3241

Tuesday, December 3, 2019
7:00 pm

I. Call to Order, Roll Call – Plan Commission

President Lengfeld called the Regular Plan Commission meeting to order at 7:00 pm.

Present: Commissioners Eric Padrutt, Todd DuQuette, Randy Case, Kevin Thusius (7:30 pm), Cliff Zander, Judy Ketelboeter and President Jay Lengfeld.

Also present: Village Administrator/Clerk Bill Chang, Fire Chief Dale Lochner, Brian Berquist – Town and Country Engineering, Dan Eckberg – Vandewalle and Associates, Jamie Zajicek, Ryan Quam, Casey Creech, Pam Born, Janet Gray, and Brian Bonti.

II. Public Comment - None

III. General Business – Regular Meeting

1) **Discussion and action regarding minutes of the regular meeting held November 4, 2019.**
A motion was made by Commissioner Padrutt, seconded by Commissioner DuQuette, and unanimously carried by the Plan Commission, to approve the November 4, 2019 meeting minutes.

2) **Discussion and Possible Action Regarding Scenic Valley Final Plat.**
A motion was made by Commissioner Ketelboeter and seconded by Commissioner DuQuette, to reaffirm the variances for the Scenic Valley Subdivision Development and recommend approval of the Scenic Valley Final Plat to the Village Board. Roll call vote requested. YES – Commissioners Padrutt, DuQuette, Case, Zander, Ketelboeter and President Lengfeld. NO – None. Motion carried 6-0.

3) **Discussion and Possible Action to Recommend the Village Board to Adopt a Resolution to Submit an Application to the Capital Region Area Planning Commission to Amend the Urban Surface Area of the Village of Cross Plains for the Creek Crossing at St. Francis Residential Subdivision Development.**

A motion was made by Commissioner Padrutt and seconded by Commissioner Case, to adopt Plan Commission Resolution 2019-1, recommending the Village Board adopt a resolution to submit an application to the Capital Region Area Planning Commission to amend the Urban Service Area of the Village of Cross Plains for the Creekside Crossing at St. Francis residential subdivision development. Roll call vote requested. YES - Commissioners Padrutt, DuQuette, Case, Zander, and President Lengfeld. NO – None. ABSTAINED – Commissioner Ketelboeter. Motion carried 5-0-1.

4) Public Hearings

a. A request from David and Candice Montag, for a Conditional Use Permit for Small Solar Energy System use located at 3023 Allies Lane, Cross Plains, WI.

A motion was made by Commissioner DuQuette, seconded by Commissioner Zander, and unanimously carried by the Plan Commission, to open the public hearing for the conditional use permit application for 3023 Allies Lane, Cross Plains, WI.

Seeing no comment, a motion was made by Commissioner Ketelboeter, seconded by Commissioner Padrutt, and unanimously carried by the Plan Commission, to close the public hearing for the conditional use permit application for 3023 Allies Lane, Cross Plains, WI.

b. A request from Joseph and Rachel Acker, for a Conditional Use Permit for Small Solar Energy System use located at 3004 Allies Lane, Cross Plains, WI.

A motion was made by Commissioner Ketelboeter, seconded by Commissioner Case, and unanimously carried by the Plan Commission, to open the public hearing for the conditional use permit application for 3004 Allies Lane, Cross Plains, WI.

Seeing no comment, a motion was made by Commissioner Ketelboeter, seconded by Commissioner Zander, and unanimously carried by the Plan Commission, to close the public hearing for the conditional use permit application for 3004 Allies Lane, Cross Plains, WI.

c. A request from Dan Stanford, for a Conditional Use Permit for Small Solar Energy System use located at 4003 Saint Francis Street, Cross Plains, WI.

A motion was made by Commissioner Thusius, seconded by Commissioner DuQuette, and unanimously carried by the Plan Commission, to open the public hearing for the conditional use permit application for 4003 Street, Cross Plains, WI.

Seeing no comment, a motion was made by Commissioner DuQuette, seconded by Commissioner Zander, and unanimously carried by the Plan

Commission, to close the public hearing for the conditional use permit application for 4003 Saint Francis Street, Cross Plains, WI.

d. **A request from Matthew and Melinda Statz, for a Conditional Use Permit for Small Solar Energy System use located at 2010 Lewis Street, Cross Plains, WI.**
A motion was made by Commissioner Padrutt, seconded by Commissioner DuQuette, and unanimously carried by the Plan Commission, to open the public hearing for the conditional use permit application for 2010 Lewis Street, Cross Plains, WI.

Seeing no comment, a motion was made by Commissioner Ketelboeter, seconded by Commissioner Duquette, and unanimously carried by the Plan Commission, to close the public hearing for the conditional use permit application for 2010 Lewis Street, Cross Plains, WI.

e. **A request from Brian and Jennifer Bonti, for a Conditional Use Permit for Small Solar Energy System use located at 2710 S. Elmwood Circle E., Cross Plains, WI.**
A motion was made by Commissioner Zander, seconded by Commissioner Case, and unanimously carried by the Plan Commission, to open the public hearing for the conditional use permit application 2710 S. Elmwood Circle E., Cross Plains, WI.

Seeing no comment, a motion was made by Commissioner DuQuette, seconded by Commissioner Padrutt, and unanimously carried by the Plan Commission, to close the public hearing for the conditional use permit application for 2710 S. Elmwood Circle E., Cross Plains, WI.

f. **A request from Timothy and Jenifer Dedering, for a Conditional Use Permit for Small Solar Energy System use located at 4005 Creek Side Way, Cross Plains, WI.**
A motion was made by Commissioner Zander, seconded by Commissioner Case, and unanimously carried by the Plan Commission, to open the public hearing for the conditional use permit application for 4005 Creek Side Way, Cross Plains, WI.

Seeing no comment, a motion was made by Commissioner Case, seconded by Commissioner Padrutt, and unanimously carried by the Plan Commission, to close the public hearing for the conditional use permit application for 4005 Creek Side Way, Cross Plains, WI.

5) **Consideration of Conditional Use Permits for Small Solar Energy Systems.**

a. **Accept and recommend the request from David and Candice Montag, for a Conditional Use Permit for Small Solar Energy System use located at 3023 Allies Lane, Cross Plains, WI.**
   A motion was made by Commissioner Zander and seconded by Commissioner Thusius, to accept and recommend the request for a Conditional Use Permit for Small Solar Energy System use located at 3023 Allies Lane, Cross Plains, WI. Roll call vote requested. YES – Commissioners Padrutt, DuQuette, Case, Thusius, Zander, Ketelboeter and President Lengfeld. NO – None. Motion carries 7-0.

b. **Accept and recommend the request from Joseph and Rachel Acker, for a Conditional Use Permit for Small Solar Energy System use located at 3004 Allies Lane, Cross Plains, WI.**
   A motion was made by Commissioner DuQuette and seconded by Commissioner Padrutt, to accept and recommend the request for a Conditional Use Permit for Small Solar Energy System use located at 3004 Allies Lane, Cross Plains, WI. Roll call vote requested. YES – Commissioners Padrutt, DuQuette, Case, Thusius, Zander, Ketelboeter and President Lengfeld. NO – None. Motion carries 7-0.

c. **Accept and recommend the request from Dan Stanford, for a Conditional Use Permit for Small Solar Energy System use located at 4003 Saint Francis Street, Cross Plains, WI.**
   A motion was made by Commissioner Ketelboeter and seconded by Commissioner Zander, to accept and recommend the request for a Conditional Use Permit for Small Solar Energy System use located at 4003 Saint Francis, Cross Plains, WI. Roll call vote requested. YES – Commissioners Padrutt, DuQuette, Case, Thusius, Zander, Ketelboeter and President Lengfeld. NO – None. Motion carries 7-0.

d. **Accept and recommend the request from Matthew and Melinda Statz, for a Conditional Use Permit for Small Solar Energy System use located at 2010 Lewis Street, Cross Plains, WI.**
   A motion was made by Commissioner DuQuette and seconded by Commissioner Zander, to accept and recommend the request for a Conditional Use Permit for Small Solar Energy System use located at 2010 Lewis Street, Cross Plains, WI. Roll call vote requested. YES – Commissioners Padrutt, DuQuette, Case, Thusius, Zander, Ketelboeter and President Lengfeld. NO – None. Motion carries 7-0.

e. **Accept and recommend the request from Brian and Jennifer Bonti, for a Conditional Use Permit for Small Solar Energy System use located at 2710 S. Elmwood Circle E., Cross Plains, WI.**

After discussion regarding a potential solar interference and Mr. Bonti waiving future claims regarding the current interference, a motion was made by Commissioner Zander and seconded by Commissioner Padrutt, to accept and recommend the request for a Conditional Use Permit for Small Solar Energy System use located at 2710 S. Elmwood Circle E., Cross Plains, WI. Roll call vote requested. YES – Commissioners Padrutt, DuQuette, Case, Thusius, Zander, Ketelboeter and President Lengfeld. NO – None. Motion carries 7-0.

f. **Accept and recommend the request from Timothy and Jenifer Dedering, for a Conditional Use Permit for Small Solar Energy System use located at 4005 Creek Side Way, Cross Plains, WI.**
A motion was made by Commissioner Thusius and seconded by Commissioner Zander, to accept and recommend the request for a Conditional Use Permit for Small Solar Energy System use located at 4005 Creek Side Way, Cross Plains, WI. Roll call vote requested. YES – Commissioners Padrutt, DuQuette, Case, Thusius, Zander, Ketelboeter and President Lengfeld. NO – None. Motion carries 7-0.

V. Adjournment

A motion was made by Commissioner DuQuette, seconded by Commissioner Thusius, and unanimously carried Plan Commission to adjourn at 8:07 pm.

Proper notice of this meeting was given to the public and posted on the public bulletin boards in accordance with the Open Meeting Law.

Respectfully submitted,

_____

Bill Chang
Village Administrator/Clerk

Village of Cross Plains
PO Box 97, 2417 Brewery Road
Cross Plains, WI 53528
Phone: (608) 798-3241
Fax: (608) 798-3817

Memorandum

To: Plan Commission
From: Bill Chang, Village Administrator/Clerk
Parks and Recreation Director
Date: January 3, 2020
Re: **Conditional Use Permits for 601 Dale Court**

Executive Summary

The following residential properties have submitted a conditional use and building permit applications to install roof mounted solar panel (small solar energy system, SSES) to their homes.

- 601 Dale Court

Project Background

Solar units allow the residents to take advantage of a natural resource and in return create a positive environmental impact by not contributing to the byproduct wastes created by traditional energy production methods. In addition, the panels and energy production will add value to the existing home. The addition of solar to these structures would be in line with the objectives of the Sustainability Committee and the Village Board's desire for a more sustainable community. The Plan Commission approved 6 solar CUPs in December. This application is of similar design by the same company.

Code Review

Section 84.29 (SR-4) Single Family Residential – 4 Zoning District

All of the properties applying for a permit are within the SR-4 Single Family 4 Zoning District. Within this district, SSES are allowed to permitted as an accessory structure under Section 84.54.65 (x). The height and setback limits for the addition of rooftop SSES shall comply with the height limits and setbacks for primary structures. The maximum height limit is 35 feet and the setback requirements are; 25 feet for front, rear and street side; and 10 feet for the side yards.

In review, all proposals would meet the height and setback requirements. The specific bulk, density, and intensity requirements are not proposed to be changed, therefore also appear to be met.

Section 84.161 Conditional Use Permit Procedures.

The code specifies the process and procedure for the Conditional Use Permit. This is highlighted in Exhibit C. The Village Administrator/Clerk's review of each application as it corresponds to Section 84.161 (e) (3) is provided below.

- Review of Comprehensive Plan– The Village of Cross Plains Comprehensive does not address the use of solar specifically. However, the plan does call out the need for a sustainable community and specifically addresses the Public Library as a LEED building. The plan also addresses a sustainable community growth and land use policies that would be friendly to such as driven by residential growth.

- Impact on neighbors – The proposed units will have little direct impact on neighbors except in some cases certain tall species of trees may not be planted so not to block solar energy to the panels. All solar panels will be constructed on the top of the roof. Overall, the SSES should reduce each homeowners demand from outside sources and reduce their carbon footprint. The overall impact on the environment is less. Potential conflicts of each applicant are listed below.

- Land use observation– the installation of rooftop solar units is not averse to residential land use. Properties are able to maintain the desired consistency of land uses and intensities.

- Service and undue burden assessment – Residential units are adequately served by utilities. Additional solar does not impose an undue burden on such facilities or utilities.

- Public benefits vs. adverse impacts– the potential adverse impacts of rooftop solar units are minimal beyond aesthetics and limiting vegetation growth.

Section 84.54.65 (x). – Small Solar Energy System.
In addition to the requirements from the previous two sections, SSES are also subject to Sections 66.0401 and 66.0403 of the Wisconsin State Statutes.

§66.0401 – If conditions or restrictions are placed, they should be meet at least one of the following conditions.

1) Serves to preserve or protect the public health or safety.
2) Does not significantly increase the cost of the system or significantly decrease its efficiency.
3) Allows for an alternative system of comparable cost and efficiency.

§66.0403 – The Village may grant the permit if:

1) The permit will not unreasonably interfere with the orderly land use and development plans of the Village.

2) No person has demonstrated that there are present plans to build a structure that would interfere with the collection of solar by the following,
    a. Building permit applied for
    b. Expended at least $500 on plans or design
    c. Other credible evidence of substantial progress made toward planning or construction
3) Benefits to applicant and public exceed any burdens.

Upon granting the permit, the Village shall specify the properties restricted by the permit and shall prepare a notice of the granting of the permit per subsection 6 for the subject property and the impacted property. The applicant then shall record the notice with the register of deeds in Dane County.

Recommendation
Village Staff recommends acceptance of the applications with recommendation to the Village Board for approval with the following minimal conditions:

1) Applicants must obtain all necessary permits.
2) Applicants must abide by all ordinances, laws, and statutes.

Appendices

Exhibit A – *Section 84.29 (SR-4) Single Family Residential – 4 Zoning District*

Exhibit B – *Section 84.84.161 Conditional Use Permit Procedures.*

Exhibit C – Section 84.65 (x)

Exhibit D – Wisconsin Statute 66.0401 and 66.0403

Exhibit E – 601 Dale Court Application

SECTION 84.29 (SR-4) Single Family Residential – 4 Zoning District.

(a) **Intent.** This district intends to create, preserve, and enhance areas for moderate density single family detached dwellings at an approximate density of 4 dwelling units per acre.

(b) **Principal Uses Permitted by Right.** Refer to Article III for detailed definitions and requirements for each of the following land uses.

(1) Single Family
(2) Selective Cutting
(3) Community Garden
(4) Outdoor Open Space Institutional
(5) Passive Outdoor Recreation
(6) Essential Services
(7) Small Scale Public Services and Utilities
(8) Community Living Arrangement (1-8 residents) meeting the requirements of Section 84.57(h)

(c) **Principal Uses Permitted as Conditional Use.** Refer to Article III for detailed definitions and requirements for each of the following land uses.

(1) Cultivation
(2) Clear Cutting
(3) Indoor Institutional
(4) Community Living Arrangement (9-15 residents) meeting the requirements of Section 84.57(i)
(5) Bed and Breakfast
(6) Large Wind Energy System
(7) Large Solar Energy System

(d) **Accessory Uses Permitted by Right.** Refer to Article III for detailed definitions and requirements for each of the following land uses.

(1) Home Occupation
(2) In-Home Daycare (4-8 children)
(3) In-Family Suite
(4) Residential Accessory Structure
(5) Nonresidential Accessory Structure
(6) Recreational Facility
(7) Landscape Feature
(8) Repealed (Ordinance #05-2017)
(9) On-Site Parking
(10) Satellite Dish
(11) Personal Antenna and Towers
(12) Communication Antenna

(e) **Accessory Uses Permitted as Conditional Use.** Refer to Article III for detailed definitions and requirements for each of the following land uses.

(1) Accessory Dwelling Unit

(2) Residential Chicken Coop
(3) Residential Apiary
(4) Small Wind Energy System
(5) Small Solar Energy System

(f) **Temporary Uses.** Refer to Article III for detailed definitions and requirements for each of the following land uses. (Exempt from setbacks unless specified in Article III.)
(1) Temporary Outdoor Assembly
(2) Temporary Shelter Structure
(3) Temporary Storage Container
(4) Temporary On-Site Construction Storage
(5) Temporary Contractor's Project Office
(6) Temporary On-Site Real Estate Sales Office
(7) Temporary Relocatable Building
(8) Garage or Estate Sale

(g) **Density, Intensity, and Bulk Regulations for the (SR-4) Single Family Residential – 4 District.**

	Residential Uses	Nonresidential Uses
Minimum Lot Area	9,600 square feet	9,600 square feet
Maximum Density	4 dwelling units per acre	N/A
Minimum Lot Frontage	50 feet	50 feet
Maximum Building Coverage of Lot	50 percent	50 percent
Minimum Landscape Surface Ratio	35 percent	35 percent
Minimum Lot Width	80 feet	80 feet
Minimum Front Setback	25 feet	25 feet
Minimum Street Side Setback	25 feet	25 feet
Minimum Side Setback	10 feet	15 feet
Minimum Rear Setback	25 feet	25 feet
Maximum Principal Building Height	35 feet	35 feet
Minimum Principal Building Separation (multi-structure developments on shared lots)	20 feet	30 feet
Minimum Pavement Setback (lot line to pavement; excludes driveway entrances)	3 feet from side, or 0 feet for shared driveway; 10 feet from right of way or rear	3 feet from side, or 0 feet for shared driveway; 10 feet from right of way or rear
Minimum Parking Required	See Article III	See Article III
Minimum Garage Door Setback to Alley (if applicable)	8 feet for doors parallel to alley; 3 feet for door perpendicular to alley	8 feet for doors parallel to alley; 3 feet for door perpendicular to alley
Accessory Building Side Setback	10 feet	10 feet
Accessory Building Rear Setback	10 feet	10 feet
Maximum Accessory Building Height	Lesser of 15 feet or principal building height	20 feet

(h) **Regulations Applicable to All Uses.** Most development will also be subject to the following requirements:

(1) Article VI: Overlay Zoning Districts
(2) Article VII: Performance Standards
(3) Article VIII: Landscaping Regulations
(4) Chapter 87: Signage Regulations

SECTION 84.161 Conditional Use Permit Procedures.

(a) **Purpose.** The purpose of this Section is to provide regulations which govern the procedure and requirements for the review and approval, or denial, of proposed conditional uses.

(b) **Applicability.** There are certain uses, which because of their unique characteristics make impractical the predetermination of permissibility. In these cases, specific standards, regulations, or conditions may be established.

(c) **Initiation of Request.** Proceedings for approval of a conditional use may be initiated by an application of the owner(s) of the subject property.

(d) **Application.** An application for a conditional use permit shall contain the following (digital files should be submitted rather than paper copies whenever possible, if applicable):

(1) A map of the subject property to scale depicting:

a. All lands for which the conditional use is proposed and all other lands within 100 feet of the boundaries of the subject property.

b. Names and addresses of the owners of all lands on said map as the same appear on the current records of the Register of Deeds of Dane County.

c. Current zoning of the subject property and its environs, and the jurisdiction(s) which maintains that control.

d. All lot dimensions of the subject property.

e. A graphic scale and a north arrow.

(2) Written description of the proposed conditional use including the type of activities, buildings, structures, and off-street parking proposed for the subject property and their general locations.

(3) A site plan of the subject property if proposed for development conforming to all requirements of Section 84.164. If the proposed conditional use is a group or large development (per Section 84.118), a proposed preliminary plat or conceptual plat may be substituted for the required site plan, provided said plat contains all information required on said site plan.

(4) Written justification for the proposed conditional use, including evidence that the application is consistent with the Comprehensive Plan.

(5) For Group and Large Development, a Transportation Demand Management (TDM) Plan meeting Wisconsin Department of Transportation requirements for content and format may be required by the Village if deemed necessary by the Village Engineer.

(e) **Review by Zoning Administrator.**

(1) The Zoning Administrator shall determine whether the application is complete and fulfills the requirements of this Chapter. If the application is determined to be incomplete, the Zoning Administrator shall notify the applicant.

(2) The Zoning Administrator may coordinate review with the Village's Development Review Team.

(3) The Zoning Administrator shall review the completed application and evaluate whether the proposed conditional use:

a. Is in harmony with the recommendations of the Comprehensive Plan.

b. Will result in a substantial or undue adverse impact on nearby property, the character of the neighborhood, environmental factors, traffic factors, parking, public improvements, public property or rights-of-way, or other matters affecting the public health, safety, or general welfare, either as they now exist or as they may in the future.

c. Maintains the desired consistency of land uses, land use intensities, and land use impacts as related to the environs of the subject property.

d. The conditional use is located in an area that will be adequately served by, and will not impose an undue burden on, any of the improvements, facilities, utilities or services provided by public agencies serving the subject property.

e. The potential public benefits outweigh any and all potential adverse impacts of the proposed conditional use, after taking into consideration the applicant's proposal and any requirements recommended by the applicant to ameliorate such impacts.

(4) The Zoning Administrator shall prepare a written report addressing items (e)(3)a.-e. above, to be forwarded to the Plan Commission for the Commission's review and use in making its recommendation to the Village Board. If the Zoning Administrator determines that the proposal may be in conflict with the provisions of the Comprehensive Plan, the Zoning Administrator shall note this determination in the report.

(f) **Public Hearing.** Within 50 days of filing of a complete application, the Plan Commission shall hold a public hearing in compliance with Section 84.158 to consider the request.

(g) **Review and Recommendation by the Plan Commission.**

(1) Within 60 days after the public hearing, the Plan Commission may make a written report to the Village Board, and/or may state in the minutes its recommendations regarding the application. Said report and/or minutes may include a formal finding of facts developed and approved by the Plan Commission concerning the requirements of Subsection (e)(3)a.-e. above.

(2) If the Plan Commission fails to make a recommendation within 60 days after the public hearing, the Village Board may hold a public hearing within 30 days after the expiration of said 60 day period. Failure to receive a recommendation from the Plan Commission shall not invalidate the proceedings or actions of the Village Board. If a public hearing is necessary, the Village Board shall provide notice per the requirements so Section 84.158.

(h) **Review and Action by Village Board.**

(1) The Village Board shall consider the recommendation of the Plan Commission regarding the proposed conditional use. The Village Board may request further information and/or additional reports from the Plan Commission, Zoning Administrator, applicant, and/or from any other source.

(2) The Village Board may take final action (by resolution) on the application at the time of its initial meeting or may continue the proceedings at applicant's request. The Village Board may approve the conditional use as originally proposed, may approve the proposed conditional use with modifications, or may deny approval of the proposed conditional use.

(3) If the Village Board wishes to make significant changes in the proposed conditional use, as recommended by the Plan Commission, then the procedure set forth in Section 62.23(7)(d) of the Wisconsin Statutes shall be followed prior to Village Board action.

(i) **Effect of Denial.** No application which has been denied (either wholly or in part) shall be resubmitted for a period of 12 months from the date of said order of denial, except on grounds of new evidence or proof of change of factors found valid by the Zoning Administrator.

(j) **Revocation of an Approved Conditional Use.** Upon approval by the Village Board, the applicant must demonstrate that the proposed conditional use meets all general and specific conditional use requirements in the site plan required for initiation of development activity on the subject property per Section 84.164. Once a conditional use is granted, no erosion control permit, site plan, certificate of occupancy, or building permit shall be issued for any development which does not comply with all requirements of this Chapter. Any conditional use found not to be in compliance with the terms of this Chapter shall be considered in violation of this Chapter and shall be subject to all applicable procedures and penalties. A conditional use may be revoked for such a violation by majority vote of the Village Board, following the procedures outlined in Subsection (i), above.

(k) **Time Limits on the Development of Conditional Use.** Unless extended as a condition of approval, the start of construction of any and all conditional uses shall be initiated within 365 days of its approval by the Village Board and shall be operational within 730 days of said approval. Failure to initiate development within this period shall automatically constitute a revocation of the conditional use. For the purposes of this Section, "operational" shall be defined as the granting of a certificate of occupancy for the conditional use. Prior to such a revocation, the applicant may request an extension of this period. Said request shall require formal approval by the Village Board and shall be based upon a showing of acceptable justification (as determined by the Village Board). However, as a condition of approval, the 365 and/or 730 day time limits may be extended for any specific period including not time limit to accommodate phased or multi-stage development.

(l) **Discontinuing an Approved Conditional Use.** Any and all conditional uses which have been discontinued for a period exceeding 365 days shall have their conditional use invalidated automatically. The burden of proof shall be on the property owner to conclusively demonstrate that the subject conditional use was operational during this period.

(m) **Change of Ownership.** All requirements of the approved conditional use shall be continued regardless of ownership of the subject property; however, submittal of a plan of operation may be required prior to the change in ownership.

(n) **Modification, Alteration, or Expansion.** Modification, alteration, or expansion of any conditional use without approval by the Village Board, shall be considered in violation of this Chapter and shall be grounds for revocation of said conditional use approval per Subsection (j), above. A modification, alteration, or expansion which has been approved as part of a prior valid condition use does not require a new conditional use approval.

(o) **Recording of Conditional Use Requirements.** Except for conditional use approvals for temporary uses, a certified copy of the authorizing resolution, containing identifiable description and any specific requirements of approval, shall be recorded by the Village, at the applicant's expense, with the Register of Deeds for the subject property.

(p) **Formerly Approved Conditional Uses.** A use now regulated as a conditional use which was approved as a legal land use, either permitted by right or as a conditional use, prior to the effective date of this Chapter, shall be considered as a legal, conforming land use so long as the previously approved conditions of use and previously approved site plan are followed. Any modification of the previously approved conditions of use or site plan shall require application and Village consideration under this Section.

(q) **Limited Conditional Uses.** A limited conditional use is any development, activity or operation for which a conditional use permit has been approved that is limited to a specific operator or property owner, or to a specific date or event upon which the conditional use permit either expires or is required to be reviewed and reapproved. The Plan Commission may recommend, and the Village Board may designate, any proposed conditional use request as a limited conditional use. The Plan Commission shall specify which of the following characteristics are present that create the need for the limited conditional use:

(1) A particular aspect of the specific land use.
(2) A particular aspect of the proposed operation (including, but not limited to, operating hours).
(3) A particular aspect of the proposed location.
(4) A particular aspect of the proposed site design.
(5) A particular aspect of the adjacent property or of the surrounding environs.
(6) Any other reason(s) the Village Board deems specially relevant and material.

(r) **Successor Conditional Uses.**

(1) **Definition.** A successor conditional use is a land use which has been granted a conditional use permit by the Village, which is proposed to undergo one or more of the following:

a. Changing from the specific use originally permitted by conditional use to another operation of the same use. (For example, changing from one restaurant to another is permitted. However, changing from a restaurant to a tavern is not permitted even though both are considered Indoor Commercial Entertainment land uses under Section 84.58(d). Likewise, changing from a drive-through restaurant to a drive-through bank is not permitted, even though both are considered In-Vehicle Sales and Service under Section 84.58(i).

b. Only a change in the ownership of the subject property.

c. Only a change in the ownership of the business or other operator of the land use.

d. Other changes explicitly identified in a currently valid conditional use permit which are identified as acceptable as a successor conditional use.

(2) **Purpose.** The purpose of these provisions is to create a process which:

a. Verifies that the proposed change is a valid successor conditional use.

b. Creates a record that the proposed change is recognized by the Village as a successor conditional use.

c. Clarifies that the same conditions of approval, development and operation continue to apply to a successor conditional use.

d. Reduces the costs and time needed to approve a successor conditional use;

(3) **Approval Process.** A successor conditional use shall not require the granting of a new conditional use permit by the Village. However, prior to operation, a successor conditional use shall require the formal reaffirmation of its status as a valid successor conditional use. This required formal reaffirmation shall be issued in writing by the Village Zoning Administrator, or by the designee of the Village Zoning Administrator.

(4) **Proposed Expansions are Not Eligible.** Any physical enlargement of a previously approved conditional use in terms of buildings, structures, activity areas, and/or any expansion of the conditions of operation, beyond the limits of site plans, floor plans and conditions of operation approved through the conditional use process, shall not be eligible for treatment as a successor conditional use, and must seek an amendment to its conditional use permit through the conditional use process.

(5) **Ineligible Land Uses.** The following land uses are not eligible for treatment as a successor conditional use, and shall require approval of a new limited conditional use permit which is specific to both the business owner and to the property owner:

a. Intermediate Home Day Care (9-15 children) land uses in residential zoning districts.

b. Bed and Breakfast land uses in residential zoning districts.

(x) **Small Solar Energy System.** An energy system which converts solar energy to usable thermal, mechanical, chemical, or electrical energy.

Regulations:

(1) Solar energy systems (rooftop, building-mounted, and free standing) are permitted as conditional uses in all zoning districts as accessory structures.

(2) Free standing solar energy systems shall comply with the requirements for accessory structures. Rooftop and building-mounted solar energy systems shall comply with the height limits and setbacks for primary structures.

(3) See Article II for specific bulk, density, and intensity requirements for accessory structures in each district.

(4) No person in control of property shall allow a tree or shrub to be placed or grow so as to cast a shadow between the hours of 9:00 a.m. and 3:00 p.m. Central Daylight Saving Time, upon a solar collector energy system capable of generating more than 1,000,000 British thermal units per year, and which supplies a part of the energy requirements for improvements on the property where the solar energy system is permanently located. The provisions of this Subsection shall not require the removal of existing vegetation.

(5) The requirements of the Wisconsin Statutes, including but not limited to Sections 66.0401 and 66.0403, shall apply to all solar energy systems.

(6) Solar energy systems are a conditional use in any district. The Village will apply Wis. Stats. Section 66.0401 and Section 66.0403 of the Wisconsin Administrative Code as amended, in the evaluation of such requests.

a. No restriction shall be placed, either directly or in effect, on the installation or use of a wind energy system, unless the restriction satisfies one of the following conditions:

1. Serves to preserve or protect the public health or safety.
2. Does not significantly increase the cost of the system or significantly decrease its efficiency.
3. Allows for an alternative system of comparable cost and efficiency.

1. Determine the costs of providing the governmental service, including the cost of personnel and capital assets used in providing the service.

2. Determine how often and to what extent the governmental service is provided and the quality of the governmental service provided.

3. Make a cost–benefit determination based on the findings under subds. 1. and 2.

4. Determine whether a private person can provide the governmental service at a cost savings to the political subdivision providing the service and at a quality at least equal to the quality of the service provided by the political subdivision.

5. If the council decides that a governmental service is not suitable for delegating to a private person, determine whether the governmental service should be retained in its present form, modified, or eliminated.

(c) After completing an analysis under par. (b), the council shall make a recommendation to the political subdivision providing the governmental service analyzed under par. (b) and publish the council's recommendation. The recommendation shall specify the recommendation's impact on the political subdivision and the political subdivision's employees.

(6) TRAINING AND ASSISTANCE. The board of regents of the University of Wisconsin System shall direct the extension to assist councils created under this section in performing their duties under subs. (4) and (5). The board of regents shall ensure that council members are trained in how to do all of the following:

(a) Conduct an analysis of a governmental service.

(b) Determine ways to improve the efficiency of delivering a governmental service.

(c) Establish, quantify, and monitor performance standards.

(d) Prepare the reports required under sub. (7) (a) and (b).

(7) REPORTS. (a) On or before June 30, 2002, each council shall submit a report to the department describing the council's activities.

(b) On or before June 30, 2003, each council shall submit a final report to the department describing the council's activities and recommendations and the extent to which its recommendations have been adopted by the political subdivision with which the council is affiliated. A report submitted under this paragraph shall provide a detailed explanation of all analyses conducted under subs. (4) and (5).

(c) On or before July 31, 2003, the department shall submit a report concerning the activities and recommendations described in the reports submitted under pars. (a) and (b) to the legislature under s. 13.172 (2) and to the governor. The department's report shall describe ways to implement such recommendations statewide.

History: 2001 a. 16.

66.0317 Cooperation region. (1) DEFINITIONS. In this section:

(a) "Cooperation region" means a federal standard metropolitan statistical area. For purposes of this section, if only a part of a county is located in a federal standard metropolitan statistical area the entire county is considered to be located in the federal standard metropolitan statistical area.

(b) "Governmental service" has the meaning given in s. 66.0316 (1) (e).

(c) "Metropolitan service delivery" means any governmental service provided to a city that is provided by the city or by another city or by a town, village, or county and provided on a multijurisdictional basis.

(d) "Municipality" means any city, village, or town.

(2) AREA COOPERATION COMPACTS. (a) 1. Except as provided in subd. 3., beginning in 2003, a municipality shall enter into an area cooperation compact with at least 2 municipalities or counties located in the same cooperation region as the municipality, or with any combination of at least 2 such entities, to perform at least 2 governmental services.

3. A municipality that is not adjacent to at least 2 other municipalities located in the same cooperation region as the municipality may enter into a cooperation compact with any adjacent municipality or with the county in which the municipality is located to perform the number of governmental services as specified under subd. 1.

(b) An area cooperation compact shall provide a plan for any municipalities or counties that enter into the compact to collaborate to provide governmental services. The compact shall provide benchmarks to measure the plan's progress and provide outcome–based performance measures to evaluate the plan's success. Municipalities and counties that enter into the compact shall structure the compact in a way that results in significant tax savings to taxpayers within those municipalities and counties.

History: 2001 a. 16, 106; 2005 a. 164.

SUBCHAPTER IV

REGULATION

66.0401 Regulation relating to solar and wind energy systems. (1e) DEFINITIONS. In this section:

(a) "Application for approval" means an application for approval of a wind energy system under rules promulgated by the commission under s. 196.378 (4g) (c) 1.

(b) "Commission" means the public service commission.

(c) "Political subdivision" means a city, village, town, or county.

(d) "Wind energy system" has the meaning given in s. 66.0403 (1) (m).

(1m) AUTHORITY TO RESTRICT SYSTEMS LIMITED. No political subdivision may place any restriction, either directly or in effect, on the installation or use of a wind energy system that is more restrictive than the rules promulgated by the commission under s. 196.378 (4g) (b). No political subdivision may place any restriction, either directly or in effect, on the installation or use of a solar energy system, as defined in s. 13.48 (2) (h) 1. g., or a wind energy system, unless the restriction satisfies one of the following conditions:

(a) Serves to preserve or protect the public health or safety.

(b) Does not significantly increase the cost of the system or significantly decrease its efficiency.

(c) Allows for an alternative system of comparable cost and efficiency.

(2) AUTHORITY TO REQUIRE TRIMMING OF BLOCKING VEGETATION. Subject to sub. (6) (a), a political subdivision may enact an ordinance relating to the trimming of vegetation that blocks solar energy, as defined in s. 66.0403 (1) (k), from a collector surface, as defined under s. 700.41 (2) (b), or that blocks wind from a wind energy system. The ordinance may include a designation of responsibility for the costs of the trimming. The ordinance may not require the trimming of vegetation that was planted by the owner or occupant of the property on which the vegetation is located before the installation of the solar or wind energy system.

(3) TESTING ACTIVITIES. A political subdivision may not prohibit or restrict any person from conducting testing activities to determine the suitability of a site for the placement of a wind energy system. A political subdivision objecting to such testing may petition the commission to impose reasonable restrictions on the testing activity.

(4) LOCAL PROCEDURE. (a) 1. Subject to subd. 2., a political subdivision that receives an application for approval shall determine whether it is complete and, no later than 45 days after the application is filed, notify the applicant about the determination. As soon as possible after receiving the application for approval, the political subdivision shall publish a class 1 notice, under ch. 985, stating that an application for approval has been filed with the

political subdivision. If the political subdivision determines that the application is incomplete, the notice shall state the reason for the determination. An applicant may supplement and refile an application that the political subdivision has determined to be incomplete. There is no limit on the number of times that an applicant may refile an application for approval. If the political subdivision fails to determine whether an application for approval is complete within 45 days after the application is filed, the application shall be considered to be complete.

2. If a political subdivision that receives an application for approval under subd. 1. does not have in effect an ordinance described under par. (g), the 45–day time period for determining whether an application is complete, as described in subd. 1., does not begin until the first day of the 4th month beginning after the political subdivision receives the application. A political subdivision may notify an applicant at any time, after receipt of the application and before the first day of the 4th month after its receipt, that it does not intend to enact an ordinance described under par. (g).

3. On the same day that an applicant makes an application for approval under subd. 1. for a wind energy system, the applicant shall mail or deliver written notice of the application to the owners of land adjoining the site of the wind energy system.

4. A political subdivision may not consider an applicant's minor modification to the application to constitute a new application for the purposes of this subsection.

(b) A political subdivision shall make a record of its decision making on an application for approval, including a recording of any public hearing, copies of documents submitted at any public hearing, and copies of any other documents provided to the political subdivision in connection with the application for approval. The political subdivision's record shall conform to the commission's rules promulgated under s. 196.378 (4g) (c) 2.

(c) A political subdivision shall base its decision on an application for approval on written findings of fact that are supported by the evidence in the record under par. (b). A political subdivision's procedure for reviewing the application for approval shall conform to the commission's rules promulgated under s. 196.378 (4g) (c) 3.

(d) Except as provided in par. (e), a political subdivision shall approve or disapprove an application for approval no later than 90 days after the day on which it notifies the applicant that the application for approval is complete. If a political subdivision fails to act within the 90 days, or within any extended time period established under par. (e), the application is considered approved.

(e) A political subdivision may extend the time period in par. (d) if, within that 90–day period, the political subdivision authorizes the extension in writing. Any combination of the following extensions may be granted, except that the total amount of time for all extensions granted under this paragraph may not exceed 90 days:

1. An extension of up to 45 days if the political subdivision needs additional information to determine whether to approve or deny the application for approval.

2. An extension of up to 90 days if the applicant makes a material modification to the application for approval.

3. An extension of up to 90 days for other good cause specified in writing by the political subdivision.

(f) 1. Except as provided in subd. 2., a political subdivision may not deny or impose a restriction on an application for approval unless the political subdivision enacts an ordinance that is no more restrictive than the rules the commission promulgates under s. 196.378 (4g) (b).

2. A political subdivision may deny an application for approval if the proposed site of the wind energy system is in an area primarily designated for future residential or commercial development, as shown in a map that is adopted, as part of a comprehensive plan, under s. 66.1001 (2) (b) and (f), before June 2, 2009, or as shown in such maps after December 31, 2015, as part of a comprehensive plan that is updated as required under s. 66.1001 (2) (i). This subdivision applies to a wind energy system that has a nominal capacity of at least one megawatt.

(g) A political subdivision that chooses to regulate wind energy systems shall enact an ordinance, subject to sub. (6) (b), that is no more restrictive than the applicable standards established by the commission in rules promulgated under s. 196.378 (4g).

(5) PUBLIC SERVICE COMMISSION REVIEW. (a) A decision of a political subdivision to determine that an application is incomplete under sub. (4) (a) 1., or to approve, disapprove, or impose a restriction upon a wind energy system, or an action of a political subdivision to enforce a restriction on a wind energy system, may be appealed only as provided in this subsection.

(b) 1. Any aggrieved person seeking to appeal a decision or enforcement action specified in par. (a) may begin the political subdivision's administrative review process. If the person is still aggrieved after the administrative review is completed, the person may file an appeal with the commission. No appeal to the commission under this subdivision may be filed later than 30 days after the political subdivision has completed its administrative review process. For purposes of this subdivision, if a political subdivision fails to complete its administrative review process within 90 days after an aggrieved person begins the review process, the political subdivision is considered to have completed the process on the 90th day after the person began the process.

2. Rather than beginning an administrative review under subd. 1., an aggrieved person seeking to appeal a decision or enforcement action of a political subdivision specified in par. (a) may file an appeal directly with the commission. No appeal to the commission under this subdivision may be filed later than 30 days after the decision or initiation of the enforcement action.

3. An applicant whose application for approval is denied under sub. (4) (f) 2. may appeal the denial to the commission. The commission may grant the appeal notwithstanding the inconsistency of the application for approval with the political subdivision's planned residential or commercial development if the commission determines that granting the appeal is consistent with the public interest.

(c) Upon receiving an appeal under par. (b), the commission shall notify the political subdivision. The political subdivision shall provide a certified copy of the record upon which it based its decision or enforcement action within 30 days after receiving notice. The commission may request of the political subdivision any other relevant governmental records and, if requested, the political subdivision shall provide such records within 30 days after receiving the request.

(d) The commission may confine its review to the records it receives from the political subdivision or, if it finds that additional information would be relevant to its decision, expand the records it reviews. The commission shall issue a decision within 90 days after the date on which it receives all of the records it requests under par. (c), unless for good cause the commission extends this time period in writing. If the commission determines that the political subdivision's decision or enforcement action does not comply with the rules it promulgates under s. 196.378 (4g) or is otherwise unreasonable, the political subdivision's decision shall be superseded by the commission's decision and the commission may order an appropriate remedy.

(e) In conducting a review under par. (d), the commission may treat a political subdivision's determination that an application under sub. (4) (a) 1. is incomplete as a decision to disapprove the application if the commission determines that a political subdivision has unreasonably withheld its determination that an application is complete.

(f) Judicial review is not available until the commission issues its decision or order under par. (d). Judicial review shall be of the commission's decision or order, not of the political subdivision's decision or enforcement action. The commission's decision or

order is subject to judicial review under ch. 227. Injunctive relief is available only as provided in s. 196.43.

(6) APPLICABILITY OF A POLITICAL SUBDIVISION OR COUNTY ORDINANCE. (a) 1. A county ordinance enacted under sub. (2) applies only to the towns in the county that have not enacted an ordinance under sub. (2).

2. If a town enacts an ordinance under sub. (2) after a county has enacted an ordinance under sub. (2), the county ordinance does not apply, and may not be enforced, in the town, except that if the town later repeals its ordinance, the county ordinance applies in that town.

(b) 1. Subject to subd. 2., a county ordinance enacted under sub. (4) applies only in the unincorporated parts of the county.

2. If a town enacts an ordinance under sub. (4), either before or after a county enacts an ordinance under sub. (4), the more restrictive terms of the 2 ordinances apply to the town, except that if the town later repeals its ordinance, the county ordinance applies in that town.

(c) If a political subdivision enacts an ordinance under sub. (4) (g) after the commission's rules promulgated under s. 196.378 (4g) take effect, the political subdivision may not apply that ordinance to, or require approvals under that ordinance for, a wind energy system approved by the political subdivision under a previous ordinance or under a development agreement.

History: 1981 c. 354; 1981 c. 391 s. 210; 1993 a. 414; 1999 a. 150 ss. 78, 79, 84; Stats. 1999 s. 66.0401; 2001 a. 30; 2009 a. 40.

This section is a legislative restriction on the ability of municipalities to regulate solar and wind energy systems. The statute is not superseded by s. 66.0403 or municipal zoning or conditional use powers. A municipality's consideration of an application for a conditional use permit for a system under this section must be in light of the restrictions placed on local regulation by this section. State ex rel. Numrich v. City of Mequon Board of Zoning Appeals, 2001 WI App 88, 242 Wis. 2d 677, 626 N.W.2d 366, 00–1643.

Sub. (1) [now sub. (1m)] requires a case–by–case approach, such as a conditional use permit procedure, and does not allow political subdivisions to find legislative facts or make policy. The local governing arm must hear the specifics of the particular system and then decide whether a restriction is warranted. It may not promulgate an ordinance in which it arbitrarily sets a "one size fits all" scheme of requirements for any system. The conditions listed in sub. (1) (a) to (c) are the standards circumscribing the power of political subdivisions, not openings for them to make policy that is contrary to the state's expressed policy. Ecker Brothers v. Calumet County, 2009 WI App 112, 321 Wis. 2d 51, 772 N.W.2d 240, 07–2109.

66.0403 Solar and wind access permits. (1) DEFINITIONS. In this section:

(a) "Agency" means the governing body of a municipality which has provided for granting a permit or the agency which the governing body of a municipality creates or designates under sub. (2). "Agency" includes an officer or employee of the municipality.

(b) "Applicant" means an owner applying for a permit under this section.

(c) "Application" means an application for a permit under this section.

(d) "Collector surface" means any part of a solar collector that absorbs solar energy for use in the collector's energy transformation process. "Collector surface" does not include frames, supports and mounting hardware.

(e) "Collector use period" means 9 a.m. to 3 p.m. standard time daily.

(f) "Impermissible interference" means the blockage of wind from a wind energy system or solar energy from a collector surface or proposed collector surface for which a permit has been granted under this section during a collector use period if such blockage is by any structure or vegetation on property, an owner of which was notified under sub. (3) (b). "Impermissible interference" does not include:

1. Blockage by a narrow protrusion, including but not limited to a pole or wire, which does not substantially interfere with absorption of solar energy by a solar collector or does not substantially block wind from a wind energy system.

2. Blockage by any structure constructed, under construction or for which a building permit has been applied for before the date the last notice is mailed or delivered under sub. (3) (b).

3. Blockage by any vegetation planted before the date the last notice is mailed or delivered under sub. (3) (b) unless a municipality by ordinance under sub. (2) defines impermissible interference to include such vegetation.

(g) "Municipality" means any county with a zoning ordinance under s. 59.69, any town with a zoning ordinance under s. 60.61, any city with a zoning ordinance under s. 62.23 (7), any 1st class city or any village with a zoning ordinance under s. 61.35.

(h) "Owner" means at least one owner, as defined under s. 66.0217 (1) (d), of a property or the personal representative of at least one owner.

(i) "Permit" means a solar access permit or a wind access permit issued under this section.

(j) "Solar collector" means a device, structure or a part of a device or structure a substantial purpose of which is to transform solar energy into thermal, mechanical, chemical or electrical energy.

(k) "Solar energy" means direct radiant energy received from the sun.

(L) "Standard time" means the solar time of the ninetieth meridian west of Greenwich.

(m) "Wind energy system" means equipment and associated facilities that convert and then store or transfer energy from the wind into usable forms of energy.

(2) PERMIT PROCEDURE. The governing body of every municipality may provide for granting a permit. A permit may not affect any land except land which, at the time the permit is granted, is within the territorial limits of the municipality or is subject to an extraterritorial zoning ordinance adopted under s. 62.23 (7a), except that a permit issued by a city or village may not affect extraterritorial land subject to a zoning ordinance adopted by a county or a town. The governing body may appoint itself as the agency to process applications or may create or designate another agency to grant permits. The governing body may provide by ordinance that a fee be charged to cover the costs of processing applications. The governing body may adopt an ordinance with any provision it deems necessary for granting a permit under this section, including but not limited to:

(a) Specifying standards for agency determinations under sub. (5) (a).

(b) Defining an impermissible interference to include vegetation planted before the date the last notice is mailed or delivered under sub. (3) (b), provided that the permit holder shall be responsible for the cost of trimming such vegetation.

(3) PERMIT APPLICATIONS. (a) In a municipality which provides for granting a permit under this section, an owner who has installed or intends to install a solar collector or wind energy system may apply to an agency for a permit.

(b) An agency shall determine if an application is satisfactorily completed and shall notify the applicant of its determination. If an applicant receives notice that an application has been satisfactorily completed, the applicant shall deliver by certified mail or by hand a notice to the owner of any property which the applicant proposes to be restricted by the permit under sub. (7). The applicant shall submit to the agency a copy of a signed receipt for every notice delivered under this paragraph. The agency shall supply the notice form. The information on the form may include, without limitation because of enumeration:

1. The name and address of the applicant, and the address of the land upon which the solar collector or wind energy system is or will be located.

2. That an application has been filed by the applicant.

3. That the permit, if granted, may affect the rights of the notified owner to develop his or her property and to plant vegetation.

4. The telephone number, address and office hours of the agency.

5. That any person may request a hearing under sub. (4) within 30 days after receipt of the notice, and the address and procedure for filing the request.

(4) HEARING. Within 30 days after receipt of the notice under sub. (3) (b), any person who has received a notice may file a request for a hearing on the granting of a permit or the agency may determine that a hearing is necessary even if no such request is filed. If a request is filed or if the agency determines that a hearing is necessary, the agency shall conduct a hearing on the application within 90 days after the last notice is delivered. At least 30 days prior to the hearing date, the agency shall notify the applicant, all owners notified under sub. (3) (b) and any other person filing a request of the time and place of the hearing.

(5) PERMIT GRANT. (a) The agency shall grant a permit if the agency determines that:

1. The granting of a permit will not unreasonably interfere with the orderly land use and development plans of the municipality;

2. No person has demonstrated that she or he has present plans to build a structure that would create an impermissible interference by showing that she or he has applied for a building permit prior to receipt of a notice under sub. (3) (b), has expended at least $500 on planning or designing such a structure or by submitting any other credible evidence that she or he has made substantial progress toward planning or constructing a structure that would create an impermissible interference; and

3. The benefits to the applicant and the public will exceed any burdens.

(b) An agency may grant a permit subject to any condition or exemption the agency deems necessary to minimize the possibility that the future development of nearby property will create an impermissible interference or to minimize any other burden on any person affected by granting the permit. Such conditions or exemptions may include but are not limited to restrictions on the location of the solar collector or wind energy system and requirements for the compensation of persons affected by the granting of the permit.

(6) RECORD OF PERMIT. If an agency grants a permit:

(a) The agency shall specify the property restricted by the permit under sub. (7) and shall prepare notice of the granting of the permit. The notice shall include the identification required under s. 706.05 (2) (c) for the owner and the property upon which the solar collector or wind energy system is or will be located and for any owner and property restricted by the permit under sub. (7), and shall indicate that the property may not be developed and vegetation may not be planted on the property so as to create an impermissible interference with the solar collector or wind energy system which is the subject of the permit unless the permit affecting the property is terminated under sub. (9) or unless an agreement affecting the property is filed under sub. (10).

(b) The applicant shall record with the register of deeds of the county in which the property is located the notice under par. (a) for each property specified under par. (a) and for the property upon which the solar collector or wind energy system is or will be located.

(7) REMEDIES FOR IMPERMISSIBLE INTERFERENCE. (a) Any person who uses property which he or she owns or permits any other person to use the property in a way which creates an impermissible interference under a permit which has been granted or which is the subject of an application shall be liable to the permit holder or applicant for damages, except as provided under par. (b), for any loss due to the impermissible interference, court costs and reasonable attorney fees unless:

1. The building permit was applied for prior to receipt of a notice under sub. (3) (b) or the agency determines not to grant a permit after a hearing under sub. (4).

2. A permit affecting the property is terminated under sub. (9).

3. An agreement affecting the property is filed under sub. (10).

(b) A permit holder is entitled to an injunction to require the trimming of any vegetation which creates or would create an impermissible interference as defined under sub. (1) (f). If the court finds on behalf of the permit holder, the permit holder shall be entitled to a permanent injunction, damages, court costs and reasonable attorney fees.

(8) APPEALS. Any person aggrieved by a determination by a municipality under this section may appeal the determination to the circuit court for a review.

(9) TERMINATION OF SOLAR OR WIND ACCESS RIGHTS. (a) Any right protected by a permit under this section shall terminate if the agency determines that the solar collector or wind energy system which is the subject of the permit is:

1. Permanently removed or is not used for 2 consecutive years, excluding time spent on repairs or improvements.

2. Not installed and functioning within 2 years after the date of issuance of the permit.

(b) The agency shall give the permit holder written notice and an opportunity for a hearing on a proposed termination under par. (a).

(c) If the agency terminates a permit, the agency may charge the permit holder for the cost of recording and record a notice of termination with the register of deeds, who shall record the notice with the notice recorded under sub. (6) (b) or indicate on any notice recorded under sub. (6) (b) that the permit has been terminated.

(10) WAIVER. A permit holder by written agreement may waive all or part of any right protected by a permit. A copy of such agreement shall be recorded with the register of deeds, who shall record such copy with the notice recorded under sub. (6) (b).

(11) PRESERVATION OF RIGHTS. The transfer of title to any property shall not change the rights and duties under this section or under an ordinance adopted under sub. (2).

(12) CONSTRUCTION. (a) This section may not be construed to require that an owner obtain a permit prior to installing a solar collector or wind energy system.

(b) This section may not be construed to mean that acquisition of a renewable energy resource easement under s. 700.35 is in any way contingent upon the granting of a permit under this section.

History: 1981 c. 354; 1983 a. 189 s. 329 (14); 1983 a. 532 s. 36; 1993 a. 414; 1995 a. 201; 1999 a. 150 s. 82; Stats. 1999 s. 66.0403; 2007 a. 97; 2009 a. 40.

The common law right to solar access is discussed. Prah v. Maretti, 108 Wis. 2d 223, 321 N.W.2d 182 (1982).

The owner of an energy system does not need a permit under this section. Barring enforceable municipal restrictions, an owner may construct a system without prior municipal approval. This section benefits and protects the owner of the system by restricting the use of nearby property to prevent an interference with the system. State ex rel. Numrich v. City of Mequon Board of Zoning Appeals, 2001 WI App 88, 242 Wis. 2d 677, 626 N.W.2d 366, 00–1643.

Wisconsin recognizes the power of the sun: Prah v. Maretti and the solar access act. 1983 WLR 1263.

66.0404 Mobile tower siting regulations. (1) DEFINITIONS. In this section:

(a) "Antenna" means communications equipment that transmits and receives electromagnetic radio signals and is used in the provision of mobile services.

(b) "Application" means an application for a permit under this section to engage in an activity specified in sub. (2) (a) or a class 2 collocation.

(c) "Building permit" means a permit issued by a political subdivision that authorizes an applicant to conduct construction activity that is consistent with the political subdivision's building code.

Exhibit E

Bill Chang

From: Kylie Gillis <kylie.gillis@everlightsolar.com>
Sent: Tuesday, December 17, 2019 9:14 AM
To: Bill Chang
Subject: Andy Smith, 603 DALE CT , city permit
Attachments: Andy_Smith_Town_of_Cross_Plains_-_Building_P_dE5Kl8ap.pdf; Andy_Smith_Engineering_11-11-19_KgJy2qYT.pdf

Hi Bill,

I had this applicant in out system under the Town of CP, not the Village. I submitted to the Town and they took a month to get back to me to tell me that it wasn't theirs. I know that the applications have to go through Village hearings and such as with our previous ones, but anything that can be done on your part to help speed this up would be greatly appreciated but by Everlight and even more so by the customer.

We wish to obtain a conditional use permit to place a rooftop solar system for the customer. The comprehensive plan makes no note of solar production, therefore the request for permit is not inconsistent with comprehensive plan. Rooftop systems will not obstruct views or cause impediments to neighboring properties. All solar panels will be located on the existing home. Solar allows the resident to take advantage of a natural resource and in return create a positive environmental impact by not contributing to the byproduct wastes created by traditional energy production methods, in addition solar adds value to the home. Pursuant to Wisconsin State Statute 66.0401(1m), "No political subdivision may place any restriction, either directly or in effect, on the installation or use of a solar energy system."

Customer: 601 Dale Ct
7013 Laufenberg Blvd, Timon & Betty Zander
7014 Laufenberg Blvd, NA
7016 Laufenberg Blvd,, Gregory & Renee Valaskey
7018 Laufenberg Blvd, Jeffrey & Deborah Miller
603 Dale Ct, NA

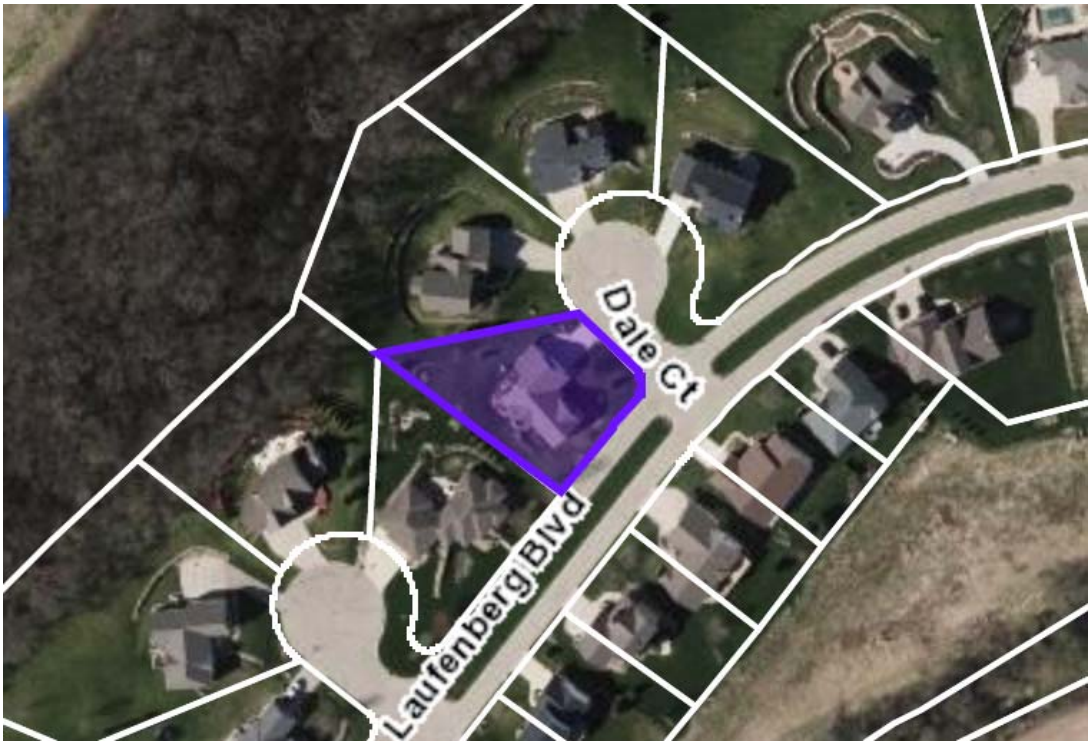

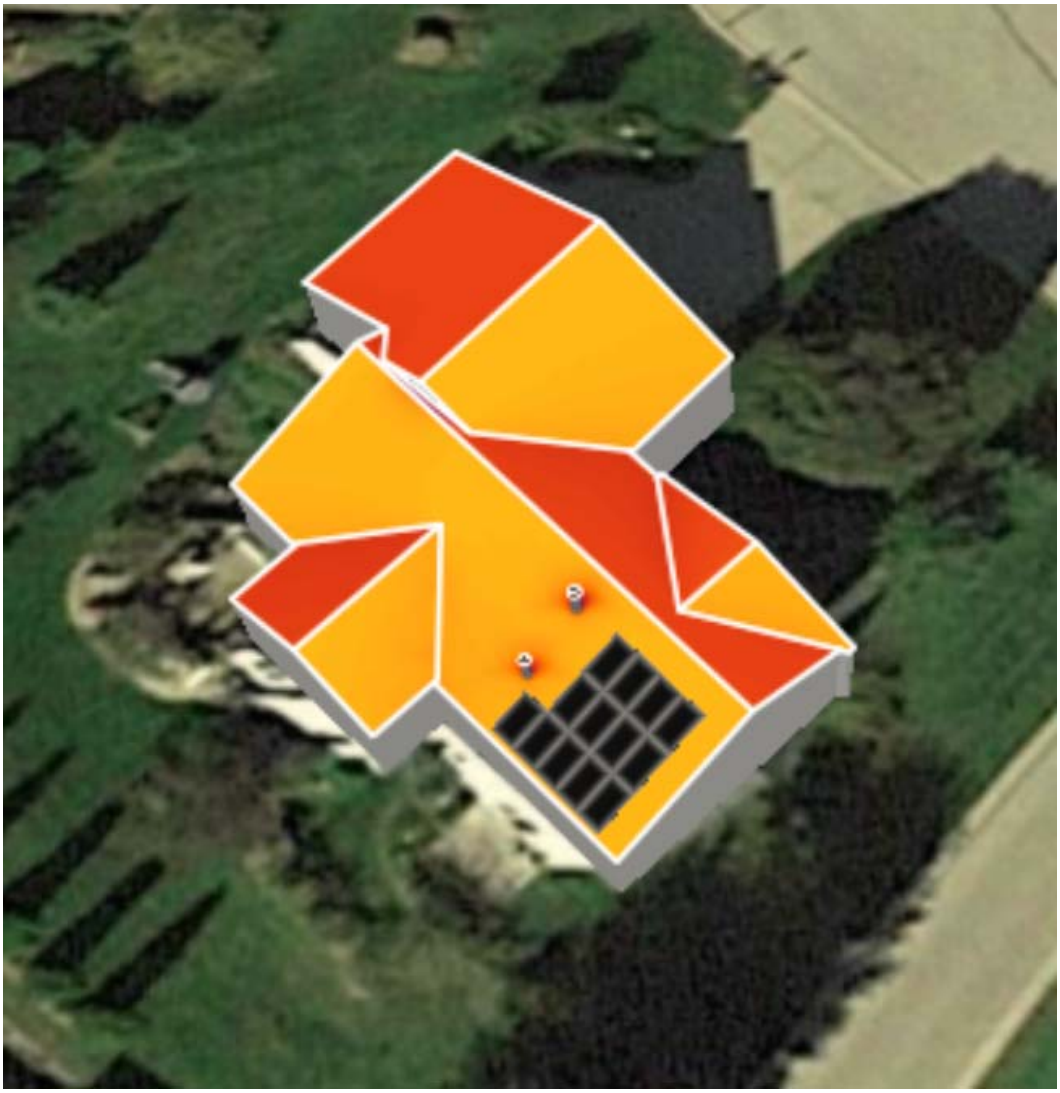

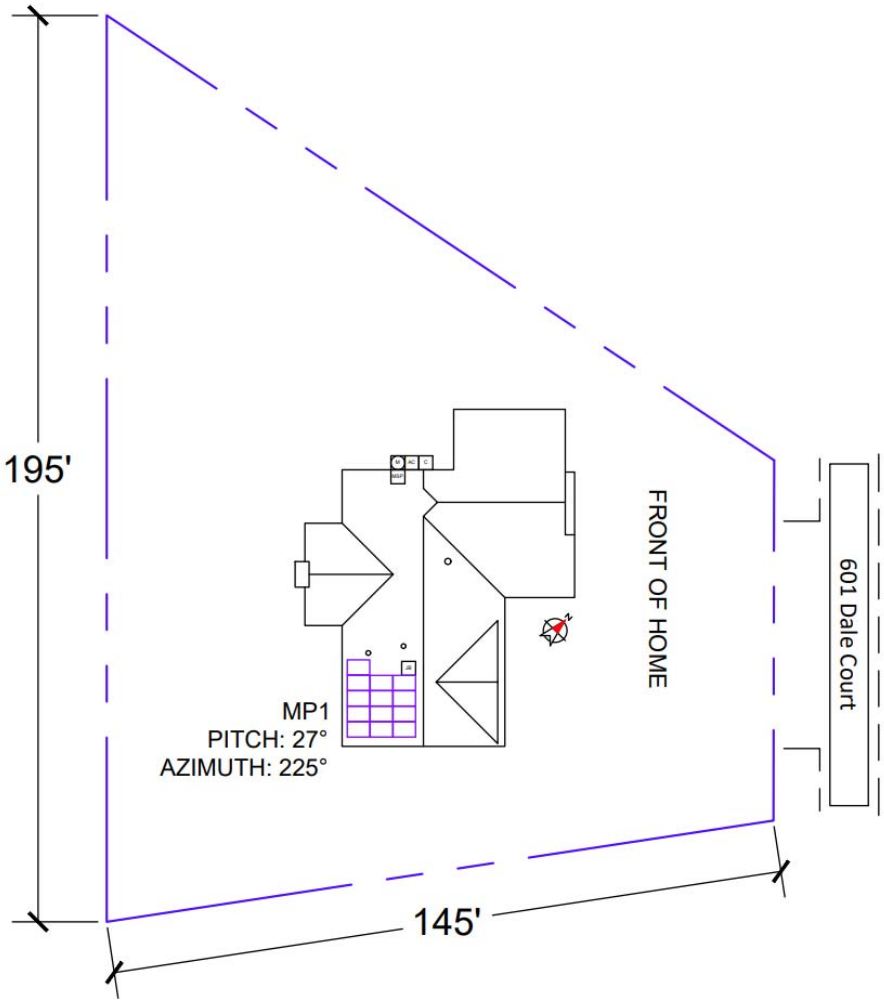

--

Kylie Gillis
Project Manager
435.770.0369 | everlightsolar.com

Save money | Save the planet | Start with solar

Scott E. Wyssling, PE, PP, CME

Wyssling Consulting
76 North Meadowbrook Drive
Alpine, UT 84004
office (201) 874-3483
swyssling@wysslingconsulting.com

November 11, 2019

Sunburn Construction
6720 Fairhaven Road
Madison, WI 53719

Re: Engineering Services
Smith Residence
601 Dale Court, Cross Plains, WI
4.200 kW System

To Whom It May Concern:

Pursuant to your request, we have reviewed the following information regarding solar panel installation on the roof of the above referenced home:

1. Site Visit/Verification Form prepared by a Sunburn Construction representative identifying specific site information including size and spacing of rafters for the existing roof structure.
2. Design drawings of the proposed system including a site plan, roof plan and connection details for the solar panels. This information was prepared by Sunburn Construction and will be utilized for approval and construction of the proposed system.
3. Photographs of the interior and exterior of the roof system identifying existing structural members and their conditions.

Based on the above information we have evaluated the structural capacity of the existing roof system to support the additional loads imposed by the solar panels and have the following comments related to our review and evaluation:

Description of Residence:

The existing residence is typical wood framing construction with the roof system consisting of truss system with all chords constructed of 2 x 4 dimensional lumber at 24" on center. The attic space is unfinished and photos indicate that there was free access to visually inspect the size and condition of the roof rafters. All wood material utilized for the roof system is assumed to be Doug-Fir #2 or better with standard construction components. The existing roofing material consists of composite asphalt shingles. Photos of the dwelling also indicate that there is a permanent foundation.

A. Loading Criteria Used

- 115 MPH wind loading based on ASCE 7-10 Exposure Category "C" at a slope of 27 degrees
- 7 PSF = Dead Load roofing/framing Live Load = 20 PSF Snow Load = 30 PSF
- 3 PSF = Dead Load solar panels/mounting hardware

  Total Dead Load =10 PSF

The above values are within acceptable limits of recognized industry standards for similar structures in accordance with the Wisconsin Uniform Dwelling Code. Analysis performed of the existing roof structure utilizing the above loading criteria indicates that the existing rafters will support the additional panel loading without damage, if installed correctly.

B. Solar Panel Anchorage

1. The solar panels shall be mounted in accordance with the most recent "*IronRidge Solar Installation Manual*", which can be found on the IronRidge Solar website (*http://ironridgesolar.com/*). If during solar panel installation, the roof framing members appear unstable or deflect non-uniformly, our office should be notified before proceeding with the installation.
2. Maximum allowable pullout per lag screw is 235 lbs/inch of penetration as identified in the National Design Standards (NDS) of timber construction specifications for Doug-Fir (North Lumber) *assumed*. Based on our evaluation, the pullout value, utilizing a penetration depth of 2 ½", is less than what is allowable per connection and therefore is adequate. Based on the variable factors for the existing roof framing and installation tolerances, using a thread depth of 2 ½" with a minimum size of 5/16" lag screw per attachment point for panel anchor mounts should be adequate with a sufficient factor of safety.
3. Considering the roof slopes, the size, spacing, condition of roof, the panel supports shall be placed no greater than 48" o/c.
4. Panel supports connections shall be staggered to distribute load to adjacent trusses.

Based on the above evaluation, it is the opinion of this office that with appropriate panel anchors being utilized the roof system will adequately support the additional loading imposed by the solar panels. This evaluation is in conformance with the Wisconsin Uniform Dwelling Code, current industry and standards, and based on information supplied to us at the time of this report.

Should you have any questions regarding the above or if you require further information do not hesitate to contact me.

Very truly yours,

Scott E. Wyssling, PE
Wisconsin License No. 46987-6

Sunburn Construction

CONTRACTOR INFORMATION:
Sunburn Construction
6720 Fairhaven Road
Madison, WI 53719
License# DCQ-111802116

SITE INFORMATION:
Andy Smith
601 Dale Court, Cross Plains , Wisconsin 53528
AC SYSTEM SIZE: 4.2 kW AC
DC SYSTEM SIZE: 3.9 kW DC

(13) Heliene 60M-HBLK 300 PV MODULES
(7) AP Systems YC600 INVERTER(S)

DATE: November 8, 2019

PAGE:	SHEET NAME:
PV01	COVER PAGE
DRAWN BY: SoloCAD	VERSION: 0

AERIAL VIEW:

STREET VIEW:

SHEET INDEX:

PV01 COVER PAGE
PV02 PROPERTY PLAN
PV03 ROOF PLAN
PV04 ROOF ATTACHMENTS + BOM
PV05 MOUNTING DETAIL
PV06 ELECTRICAL DIAGRAM
PV07 LABELS
PV08 PLACARD
PV09 SITE PHOTOS

GENERAL NOTES:

1. INSTALLATION OF SOLAR PHOTOVOLTAIC SYSTEM SHALL BE IN ACCORDANCE WITH NEC ARTICLE 690, AND ALL OTHER APPLICABLE NEC CODES WHERE NOTED OR EXISTING.
2. PROPER ACCESS AND WORKING CLEARANCE AROUND EXISTING AND PROPOSED ELECTRICAL EQUIPMENT WILL COMPLY WITH NEC ARTICLE 110.
3. ALL WIRES, INCLUDING THE GROUNDING ELECTRODE CONDUCTOR SHALL BE PROTECTED FROM PHYSICAL DAMAGE IN ACCORDANCE WITH NEC ARTICLE 250
4. THE PV MODULES ARE CONSIDERED NON-COMBUSTIBLE; THIS SYSTEM IS UTILITY INTERACTIVE PER UL 1741 AND DOES NOT INCLUDE STORAGE BATTERIES OR OTHER ALTERNATIVE STORAGE SOURCES.
5. ALL DC WIRES SHALL BE SIZED ACCORDING TO [NEC 690.8]
6. DC CONDUCTORS SHALL BE WITHIN PROTECTED RACEWAYS IN ACCORDANCE WITH [NEC 690.31]
7. ALL SIGNAGE TO BE PLACED IN ACCORDANCE WITH LOCAL JURISDICTIONAL BUILDING CODE.

DESCRIPTION OF DESIGN:
INSTALLATION OF GRID -TIED, UTILITY INTERACTIVE PHOTOVOLTAIC SYSTEM

EQUIPMENT:
AC SYSTEM SIZE: 4.2 kW AC
DC SYSTEM SIZE: 3.9 kW DC
PV MODULES: (13) Heliene 60M-HBLK 300
INVERTER(S): (7) AP Systems YC600
RACKING: IRONRIDGE XR FLUSH MOUNT RAILING & ROOF ATTACHMENT SYSTEM - 48" O.C.

APPLICABLE GOVERNING CODES:

2017 NATIONAL ELECTRIC CODE [NEC]
2015 INTERNATIONAL BUILDING CODE [IBC]
2015 INTERNATIONAL RESIDENTIAL CODE [IRC]
2015 INTERNATIONAL FIRE CODE [IFC]

SITE SPECIFICATIONS:

OCCUPANCY: R-3
ZONING: RESIDENTIAL
EXPOSURE CATEGORY: B

Sunburn Construction

CONTRACTOR INFORMATION:
Sunburn Construction
6720 Fairhaven Road
Madison, WI 53719
License# DCQ-111802116

SITE INFORMATION:
Andy Smith
601 Dale Court, Cross Plains , Wisconsin 53528
AC SYSTEM SIZE: 4.2 kW AC
DC SYSTEM SIZE: 3.9 kW DC

(13) Heliene 60M-HBLK 300 PV MODULES
(7) AP Systems YC600 INVERTER(S)

DATE: November 8, 2019

PAGE: PV02
SHEET NAME: PROPERTY PLAN
DRAWN BY: SoloCAD
VERSION: 0

EQUIPMENT LEGEND:

- M — UTILITY METER
- MSP — MAIN SERVICE PANEL
- AC — VISIBLE, LOCKABLE, LABELED AC DISCONNECT
- PV — METER SOCKET (FOR UTILITY PV METER)
- INV — INVERTER
- C — COMBINER BOX
- LC — LOAD CENTER
- FIRE ACCESS PATHWAY (3' TYP)
- PROPERTY LINE
- BATT — BATTERY(IES)

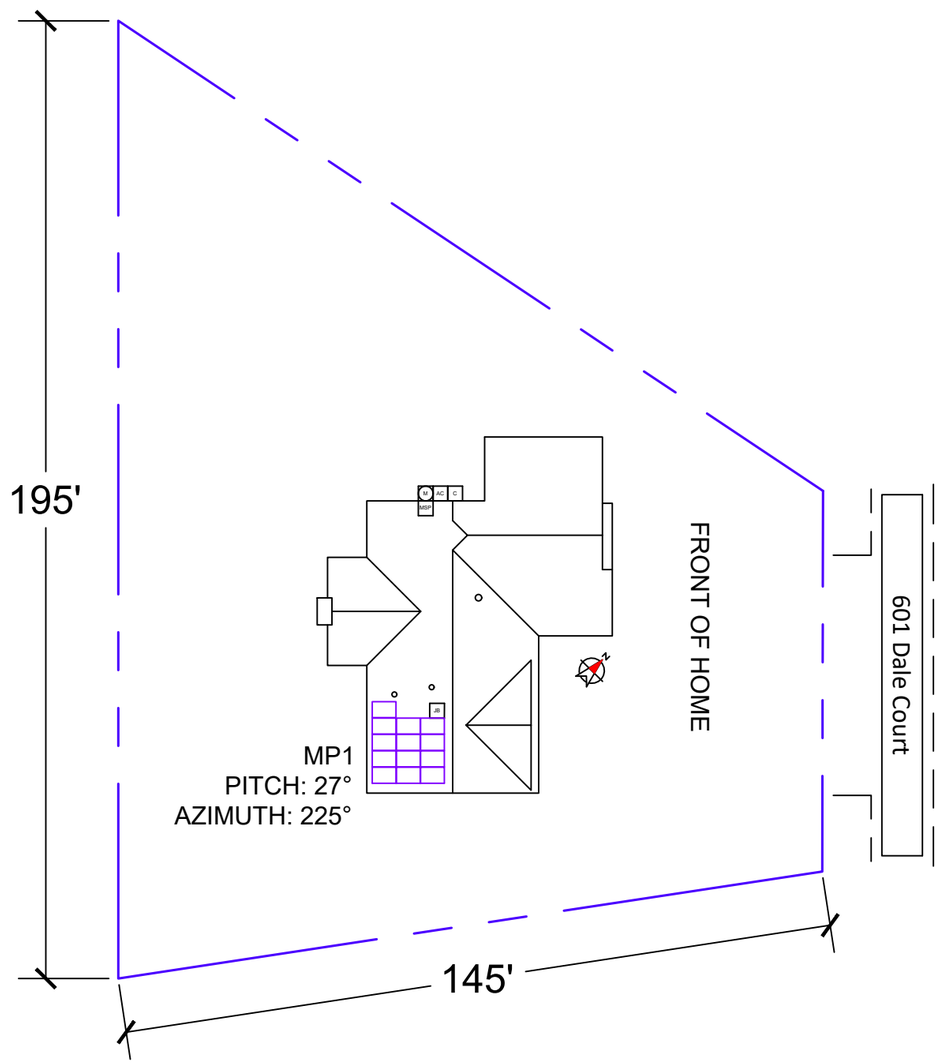

VISIBLE, LOCKABLE, LABELED AC DISCONNECT LOCATED WITHIN 10' OF UTILITY METER

Sunburn Construction

CONTRACTOR INFORMATION:
Sunburn Construction
6720 Fairhaven Road
Madison, WI 53719
License# DCQ-111802116

SITE INFORMATION:
Andy Smith
601 Dale Court, Cross Plains , Wisconsin 53528
AC SYSTEM SIZE: 4.2 kW AC
DC SYSTEM SIZE: 3.9 kW DC

(13) Heliene 60M-HBLK 300 PV MODULES
(7) AP Systems YC600 INVERTER(S)

DATE: November 8, 2019

PAGE:	SHEET NAME:
PV03	ROOF PLAN
DRAWN BY: SoloCAD	VERSION: 0

EQUIPMENT LEGEND:

- M — UTILITY METER
- MSP — MAIN SERVICE PANEL
- AC — VISIBLE, LOCKABLE, LABELED AC DISCONNECT
- PV — METER SOCKET (FOR UTILITY PV METER)
- INV — INVERTER
- C — COMBINER BOX
- LC — LOAD CENTER
- FIRE ACCESS PATHWAY (3' TYP)
- BATT — BATTERY(IES)

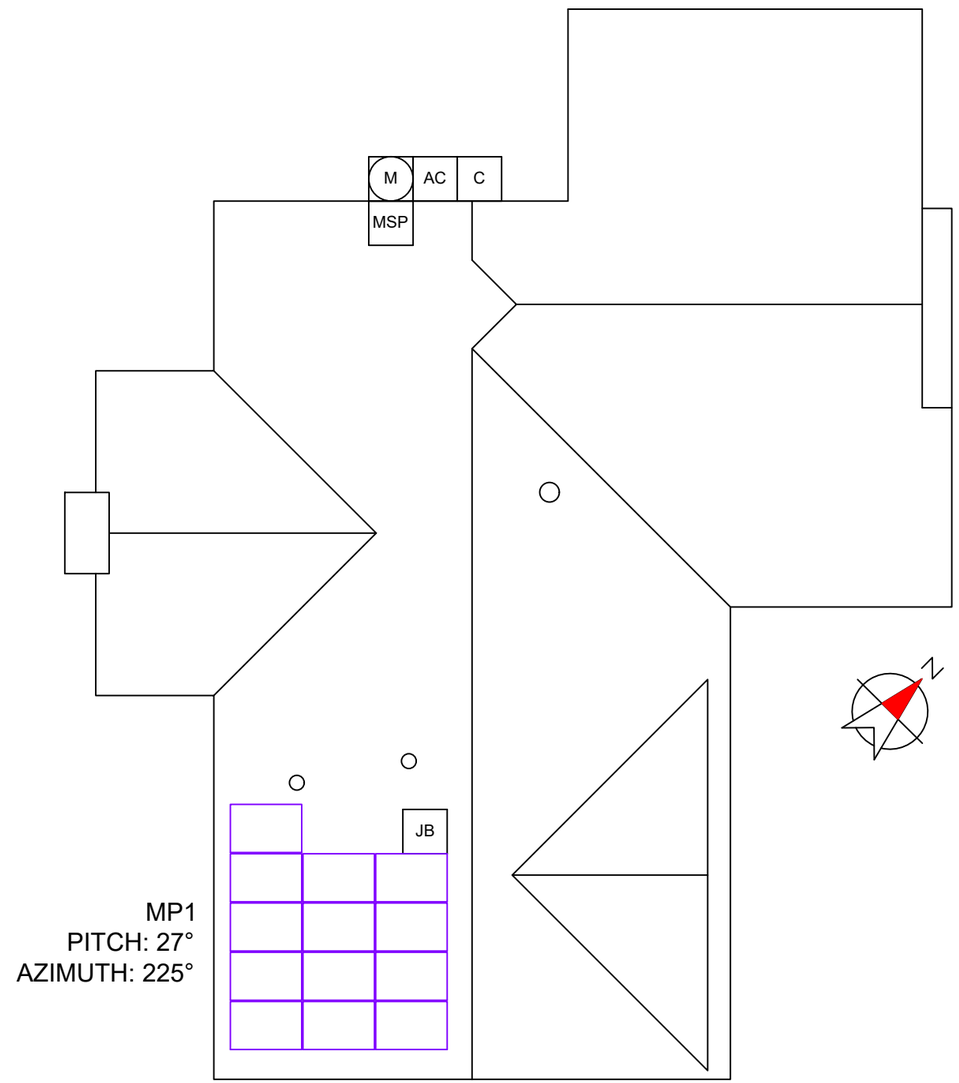

VISIBLE, LOCKABLE, LABELED AC DISCONNECT LOCATED WITHIN 10' OF UTILITY METER

WISCONSIN
SCOTT E. WYSSLING
46987-6
ALPINE
UT
PROFESSIONAL ENGINEER

Sunburn Construction

CONTRACTOR INFORMATION:
Sunburn Construction
6720 Fairhaven Road
Madison, WI 53719
License# DCQ-111802116

SITE INFORMATION:
Andy Smith
601 Dale Court, Cross Plains , Wisconsin 53528
AC SYSTEM SIZE: 4.2 kW AC
DC SYSTEM SIZE: 3.9 kW DC
(13) Heliene 60M-HBLK 300 PV MODULES
(7) AP Systems YC600 INVERTER(S)

DATE: November 8, 2019

PAGE: PV04
SHEET NAME: ROOF ATTACHMENTS + BOM
DRAWN BY: SoloCAD
VERSION: 0

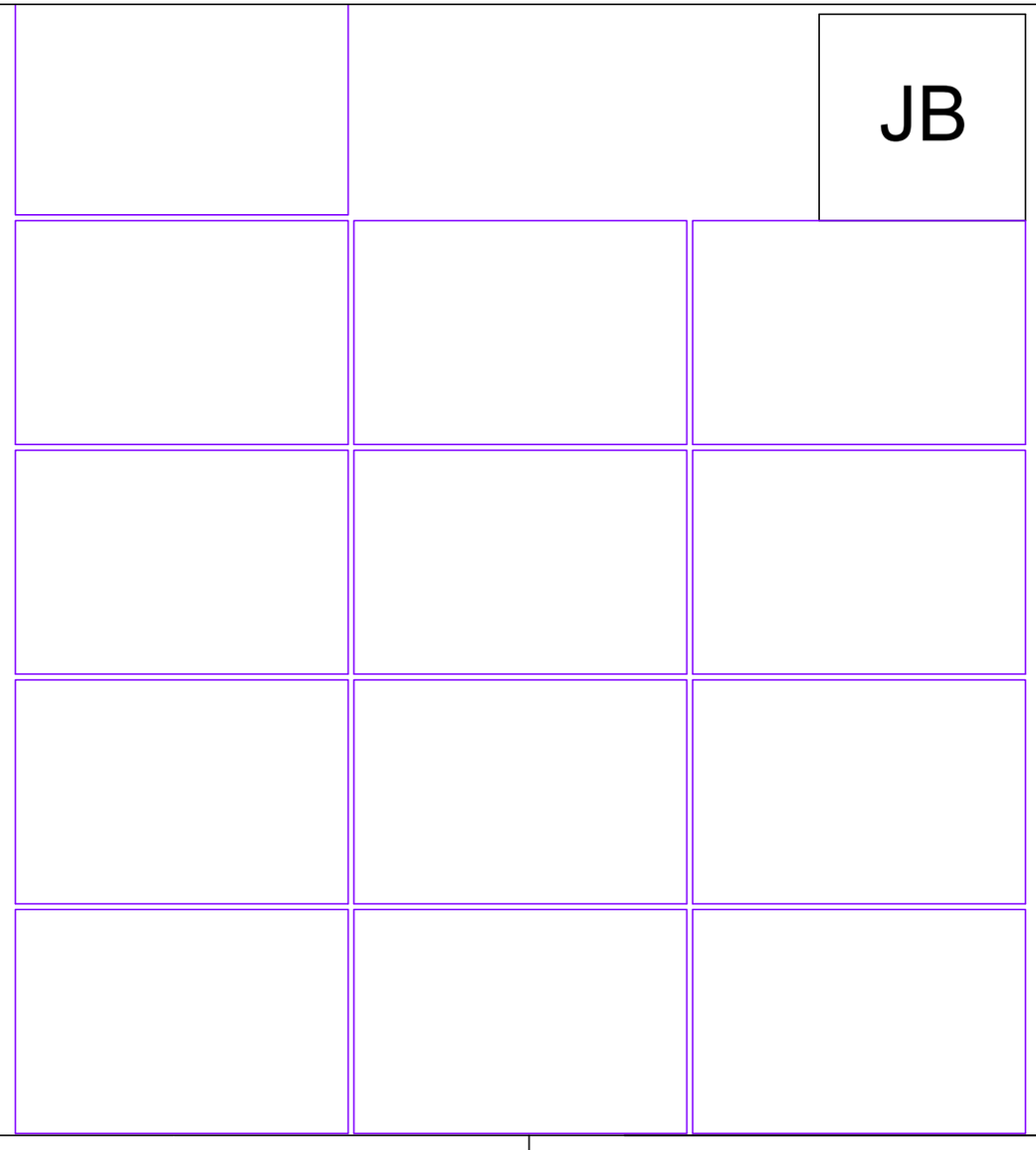

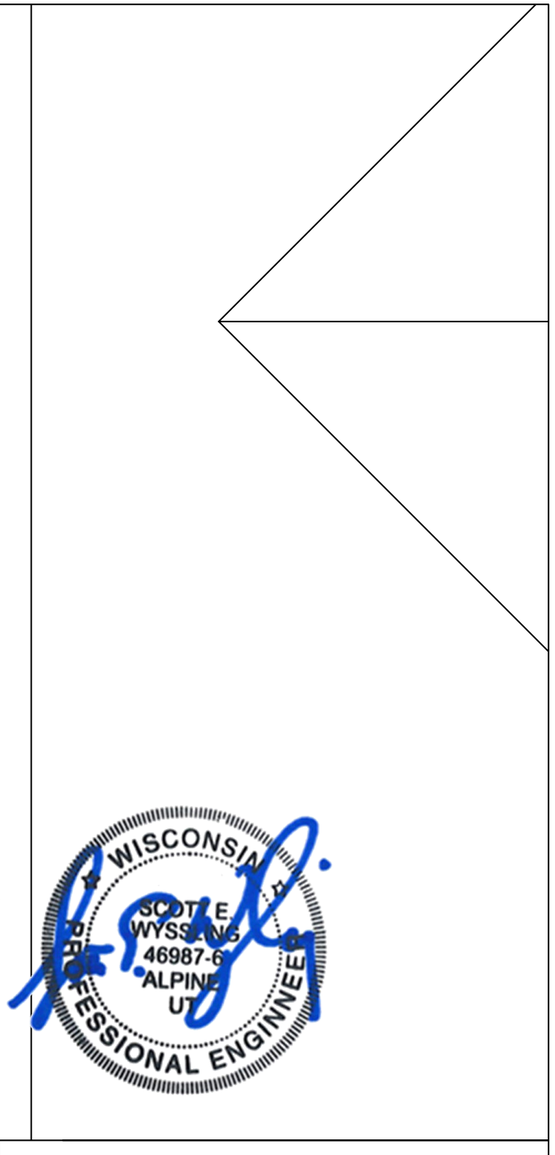

PHOTOVOLTAIC ARRAY STRUCTURAL CRITERIA:	
ROOF ATTACHMENT COUNT:	26
PV MODULE COUNT:	13
ARRAY AREA:	MODULE COUNT * 18.06ft² = 234.78
ROOF AREA:	2994 ft²
PERCENT OF ROOF COVERED:	8%
ARRAY WEIGHT:	MODULE COUNT * 50lbs = 650
DISTRIBUTED LOAD:	ARRAY LBS/ATTACHMENTS = 25
POINT LOAD: (lbs/ft²)	(ARRAY) WEIGHT/AREA = 2.77 lbs/ft²

MOUNTING EQUIPMENT QTY:	
ROOF ATTACHMENT COUNT:	(26)
PV MODULE COUNT:	(13)
MID CLAMP COUNT:	(20)
END CLAMP QTY:	(12)
SPLICE COUNT:	(0)
ATTACHMENT SPACING:	48

FRAMING INFO:	
RAFTER SIZE:	2x4
RAFTER SPACING:	24"
FRAMING TYPE:	Manufactured Truss

Sunburn Construction

CONTRACTOR INFORMATION:
Sunburn Construction
6720 Fairhaven Road
Madison, WI 53719
License# DCQ-111802116

SITE INFORMATION:
Andy Smith
601 Dale Court, Cross Plains , Wisconsin 53528
AC SYSTEM SIZE: 4.2 kW AC
DC SYSTEM SIZE: 3.9 kW DC
(13) Heliene 60M-HBLK 300 PV MODULES
(7) AP Systems YC600 INVERTER(S)

DATE: November 8, 2019

PAGE: PV05
SHEET NAME: MOUNTING DETAIL
DRAWN BY: SoloCAD
VERSION: 0

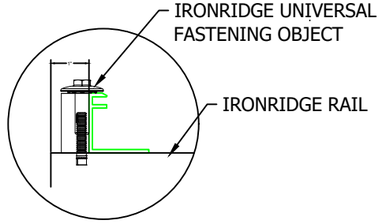

1 END CLAMP DETAILS

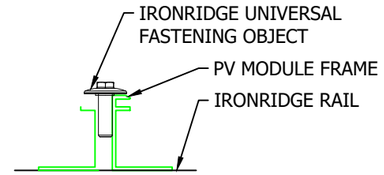

2 MID CLAMP DETAILS

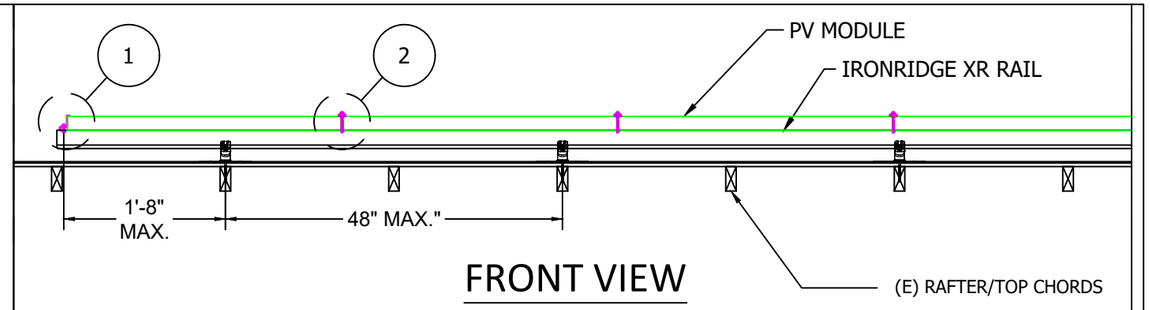

FRONT VIEW

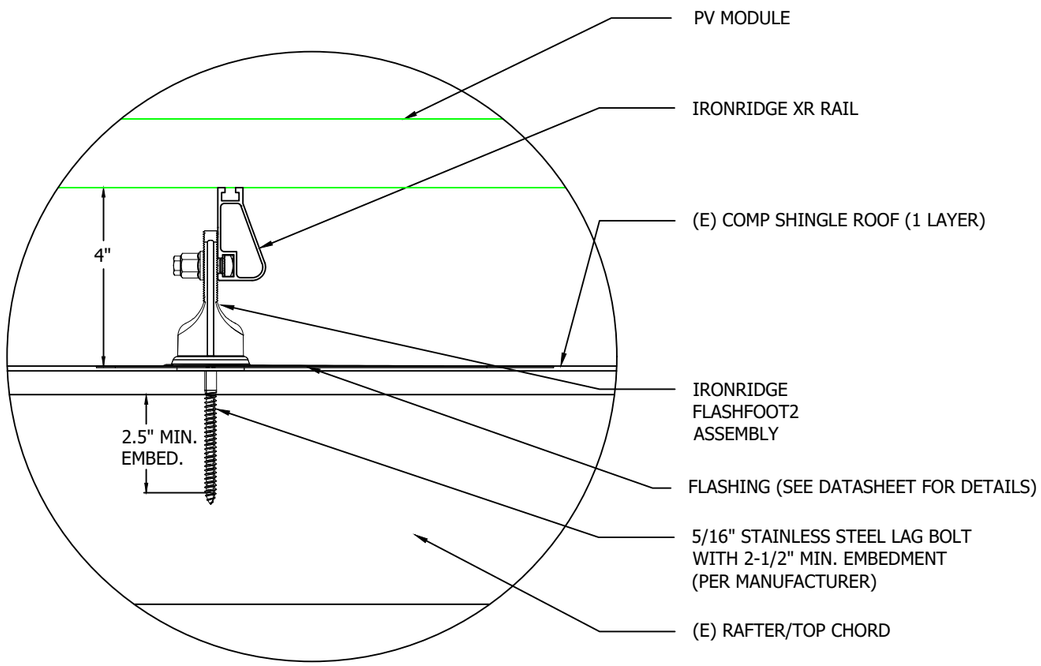

3 DETAIL, MOUNTING AND FLASHING

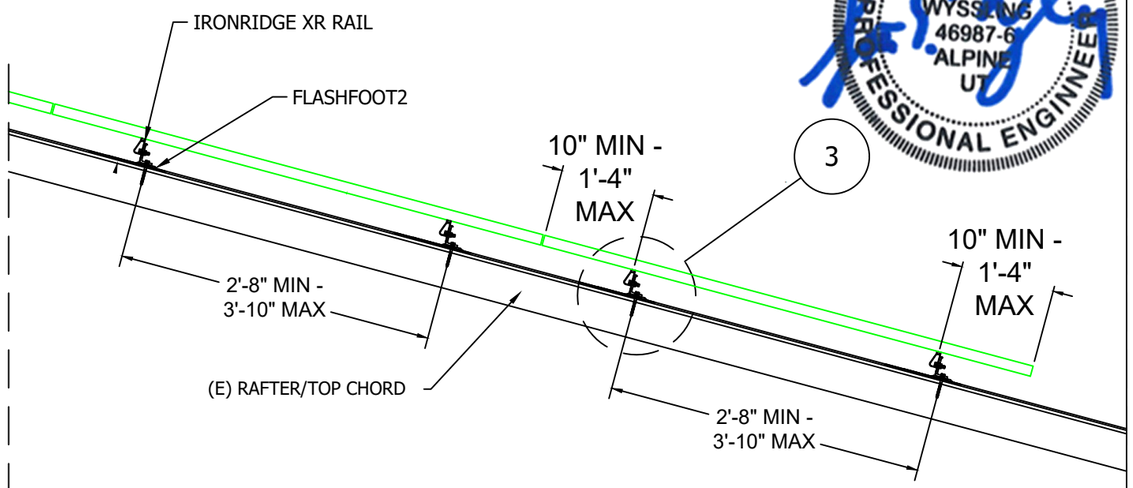

SIDE VIEW

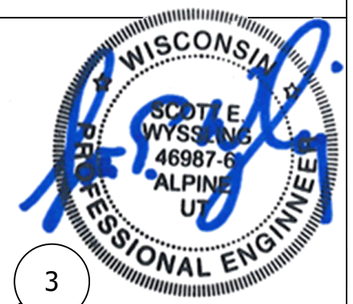

PHOTOVOLTAIC ARRAY STRUCTURAL CRITERIA:	
ROOF ATTACHMENT COUNT:	26
PV MODULE COUNT:	13
ARRAY AREA:	MODULE COUNT * 18.06ft² = 234.78
ROOF AREA:	2994 ft²
PERCENT OF ROOF COVERED:	8%
ARRAY WEIGHT:	MODULE COUNT * 50lbs = 650
DISTRIBUTED LOAD:	ARRAY LBS/ATTACHMENTS = 25
POINT LOAD: (lbs/ft²)	(ARRAY) WEIGHT/AREA = 2.77 lbs/ft²

MOUNTING EQUIPMENT QTY:	
ROOF ATTACHMENT COUNT:	(26)
PV MODULE COUNT:	(13)
MID CLAMP COUNT:	(20)
END CLAMP QTY:	(12)
SPLICE COUNT:	(0)
ATTACHMENT SPACING:	48

FRAMING INFO:	
RAFTER SIZE:	2x4
RAFTER SPACING:	24"
FRAMING TYPE:	Manufactured Truss

Sunburn Construction

CONTRACTOR INFORMATION:
Sunburn Construction
6720 Fairhaven Road
Madison, WI 53719
License# DCQ-111802116

SITE INFORMATION:
Andy Smith
601 Dale Court, Cross Plains , Wisconsin 53528
AC SYSTEM SIZE: 4.2 kW AC
DC SYSTEM SIZE: 3.9 kW DC

(13) Heliene 60M-HBLK 300 PV MODULES
(7) AP Systems YC600 INVERTER(S)

DATE: November 8, 2019

PAGE: PV06 SHEET NAME: ELECTRICAL DIAGRAM

DRAWN BY: SoloCAD VERSION: 0

WIRE SCHEDULE

1	(1) 12-2 TC-ER, THWN-2, COPPER (OR CODE APPROVED EQUIVALENT) (1) 6 AWG BARE, COPPER (GROUND)	2	(1) 10 AWG THWN-2, or THHN, or 10/2 NM-B COPPER - (POSITIVE) (1) 10 AWG THWN-2, or THHN, or 10/2 NM-B COPPER - (NEGATIVE) (1) 10 AWG THWN-2, or THHN, or 10/2 NM-B COPPER - (GROUND) (1) 3/4" LIQUID TIGHT CONDUIT or 3/4" EMT or FMC (OR CODE APPROVED EQUIVALENT)	3	(1) 10 AWG THHN/THWN-2, COPPER - (L1) (1) 10 AWG THHN/THWN-2 COPPER - (L2) (1) 10 AWG THHN/THWN-2 (GROUND) CONDUIT: 3/4" EMT or 3/4" LIQUID TIGHT (OR CODE APPROVED EQUIVALENT)	4	(1) 10 AWG THWN-2 COPPER - (L1) (1) 10 AWG THWN-2 COPPER - (L2) (1) 10 AWG THWN-2 COPPER - (NEUTRAL) (1) 10 AWG THWN-2 COPPER - (GROUND) (1) CONDUIT: 3/4" EMT or 3/4" LIQUID TIGHT (OR CODE APPROVED EQUIVALENT)

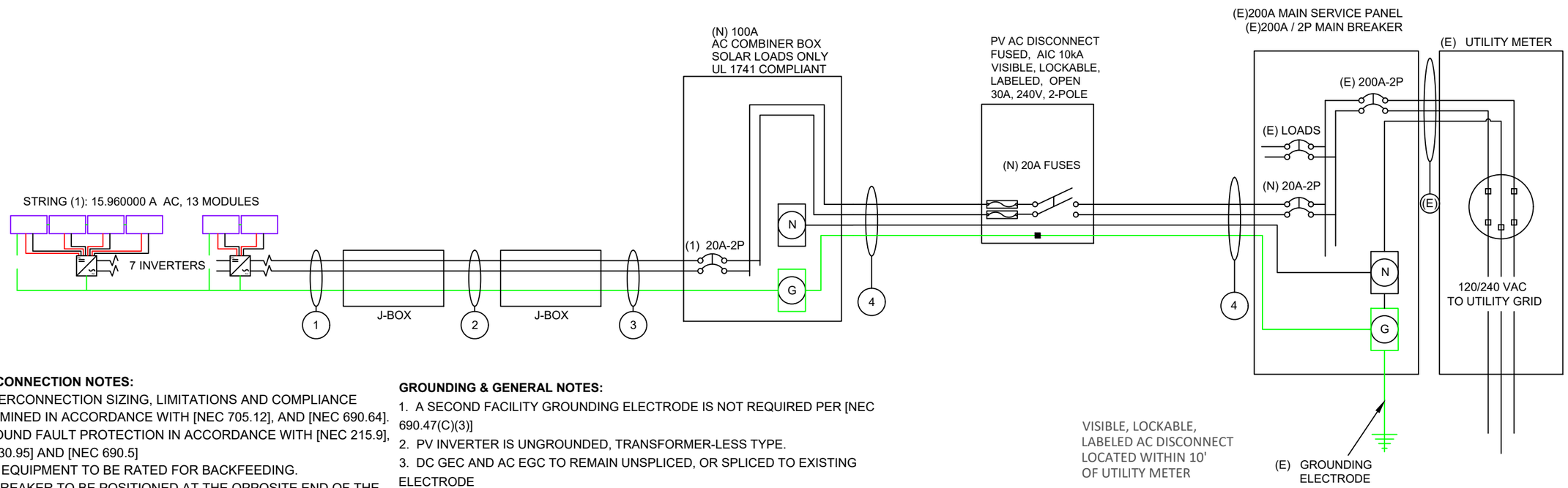

INTERCONNECTION NOTES:

1. INTERCONNECTION SIZING, LIMITATIONS AND COMPLIANCE DETERMINED IN ACCORDANCE WITH [NEC 705.12], AND [NEC 690.64].
3. GROUND FAULT PROTECTION IN ACCORDANCE WITH [NEC 215.9], [NEC 230.95] AND [NEC 690.5]
4. ALL EQUIPMENT TO BE RATED FOR BACKFEEDING.
5. PV BREAKER TO BE POSITIONED AT THE OPPOSITE END OF THE BUSBAR RELATIVE TO THE MAIN BREAKER.

DISCONNECT NOTES

1. DISCONNECTING SWITCHES SHALL BE WIRED SUCH THAT WHEN THE SWITCH IS OPENED THE CONDUCTORS REMAINING LIVE ARE CONNECTED TO THE TERMINALS MARKED "LINE SIDE" (TYPICALLY THE UPPER TERMINALS)
2. AC DISCONNECT MUST BE ACCESSIBLE TO QUALIFIED UTILITY PERSONNEL, BE LOCKABLE, AND BE A VISIBLE-BREAK SWITCH

GROUNDING & GENERAL NOTES:

1. A SECOND FACILITY GROUNDING ELECTRODE IS NOT REQUIRED PER [NEC 690.47(C)(3)]
2. PV INVERTER IS UNGROUNDED, TRANSFORMER-LESS TYPE.
3. DC GEC AND AC EGC TO REMAIN UNSPLICED, OR SPLICED TO EXISTING ELECTRODE
4. ANY EXISTING WIRING INVOLVED WITH PV SYSTEM CONNECTION THAT IS FOUND TO BE INADEQUATE PER CODE SHALL BE CORRECTED PRIOR TO FINAL INSPECTION.
5. JUNCTION BOX QUANTITIES, AND PLACEMENT SUBJECT TO CHANGE IN THE FIELD - JUNCTION BOXES DEPICTED ON ELECTRICAL DIAGRAM REPRESENT WIRE TYPE TRANSITIONS.
6. AC DISCONNECT NOTED IN EQUIPMENT SCHEDULE OPTIONAL IF OTHER AC DISCONNECTING MEANS IS LOCATED WITHIN 10' OF SERVICE DISCONNECT.

EQUIPMENT SCHEDULE:

TYPE:	QTY:	DESCRIPTION:	RATING:
MODULES:	(13)	Heliene 60M-HBLK 300	300 W
INVERTERS:	(7)	AP Systems YC600	600 W
AC DISCONNECT(S):	(1)	PV AC DISCONNECT, 240V, 2-POLE	30 A

Sunburn Construction

CONTRACTOR INFORMATION:
Sunburn Construction
6720 Fairhaven Road
Madison, WI 53719
License# DCQ-111802116

SITE INFORMATION:
Andy Smith
601 Dale Court, Cross Plains , Wisconsin 53528
AC SYSTEM SIZE: 4.2 kW AC
DC SYSTEM SIZE: 3.9 kW DC
(13) Heliene 60M-HBLK 300 PV MODULES
(7) AP Systems YC600 INVERTER(S)

DATE: November 8, 2019

PAGE:	SHEET NAME:
PV07	LABELS
DRAWN BY: SoloCAD	VERSION: 0

⚠ WARNING
ELECTRIC SHOCK HAZARD
THE DC CONDUCTORS OF THIS PHOTOVOLTAIC SYSTEM ARE UNGROUNDED AND MAY BE ENERGIZED

LABEL 1
AT EACH JUNCTION BOX, COMBINER BOX, DISCONNECT, AND DEVICE WHERE ENERGIZED UNGROUNDED CONDUCTORS MAY BE EXPOSED DURING SERVICE.
NEC. 690.35(F)

⚠ WARNING
ELECTRIC SHOCK HAZARD
TERMINALS ON THE LINE AND LOAD SIDES MAY BE ENERGIZED IN THE OPEN POSITION

LABEL 2
FOR PV DISCONNECTING MEANS WHERE ALL TERMINALS OF THE DISCONNECTING MEANS MAY BE ENERGIZED IN THE OPEN POSITION.
NEC 690.17(E), NEC 705.22

PHOTOVOLTAIC SYSTEM
⚠ AC DISCONNECT ⚠
RATED AC OUTPUT CURRENT 30 A
NOMINAL OPERATING AC VOLTAGE 240 V

LABEL 4
AT POINT OF INTERCONNECTION, MARKED AT AC DISCONNECTING MEANS.
NEC 690.54, NEC 690.13 (B)

⚠ WARNING
DUAL POWER SUPPLY
SOURCES: UTILITY GRID AND PV SOLAR ELECTRIC SYSTEM

LABEL 5
AT POINT OF INTERCONNECTION FOR EQUIPMENT CONTAINING OVERCURRENT DEVICES IN CIRCUTS SUPPLYING POWER TO A BUSBAR OR CONDUCTOR SUPPLIED FORM MULTIPLE SOURCES, EACH SERVICE EQUIPMENT AND ALL ELECTRIC POWER PRODUCTION SOURCE LOCATIONS.
NEC 705.12(D)(3)

WARNING: PHOTOVOLTAIC POWER SOURCE

LABEL 6
AT DIRECT-CURRENT EXPOSED RACEWAYS, CABLE TRAYS, COVERS AND ENCLOSURES OF JUNCTION BOXES, AND OTHER WIRING METHODS; SPACED AT MAXIMUM 10FT SECTION OR WHERE SEPARATED BY ENCLOSURES, WALLS, PARTITIONS, CEILINGS, OR FLOORS.
NEC 690.31(G)(3&4)

⚠ WARNING
INVERTER OUTPUT CONNECTION
DO NOT RELOCATE THIS OVERCURRENT DEVICE

LABEL 7
PLACED ADJACENT TO THE BACK-FED BREAKER FROM THE INVERTER IF TIE IN CONSISTS OF LOAD SIDE CONNECTION TO BUSBAR.
NEC 705.12(D)(2)(3)(B)

PHOTOVOLTAIC SYSTEM EQUIPPED WITH RAPID SHUTDOWN

LABEL 8
SIGN LOCATED AT UTILITY SERVICE EQUIPMENT.
NEC 690.56(C)

⚠ WARNING
THIS EQUIPMENT FED BY MULTIPLE SOURCES. TOTAL RATING OF ALL OVERCURRENT DEVICES, EXCLUDING MAIN SUPPLY OVERCURRENT DEVICE, SHALL NOT EXCEED AMPACITY OF BUSBAR.

LABEL 9 (ONLY IF 3 OR MORE SUPPLY SOURCES TO A BUSBAR)
SIGN LOCATED AT LOAD CENTER IF CONTAINS 3 OR MORE POWER SOURCES.
NEC 705.12(D)(2)(3)(C)

SOLAR PV SYSTEM EQUIPPED WITH RAPID SHUTDOWN
TURN RAPID SHUTDOWN SWITCH TO THE "OFF" POSITION TO SHUT DOWN PV SYSTEM AND REDUCE SHOCK HAZARD IN THE ARRAY
SOLAR ELECTRIC PV PANELS

LABEL 10
FOR PV SYSTEMS THAT SHUT DOWN THE ARRAY AND CONDUCTORS LEAVING THE ARRAY:
SIGN TO BE LOCATED ON OR NO MORE THAN 3 FT AWAY FROM SERVICE DISCONNECTING MEANS TO WHICH THE PV SYSTEMS ARE CONNECTED AND SHALL INDICATE THE LOCATION OF ALL IDENTIFIED RAPID SHUTDOWN SWITCHES IF NOT AT THE SAME LOCATION.
[NEC 690.56(C)(1)(A)]

SOLAR PV SYSTEM EQUIPPED WITH RAPID SHUTDOWN
TURN RAPID SHUTDOWN SWITCH TO THE "OFF" POSITION TO SHUT DOWN CONDUCTORS OUTSIDE THE ARRAY CONDUCTORS WITHIN THE ARRAY REMAIN ENERGIZED IN SUNLIGHT
SOLAR ELECTRIC PV PANELS

LABEL 11
FOR PV SYSTEMS THAT ONLY SHUT DOWN CONDUCTORS LEAVING THE ARRAY:
SIGN TO BE LOCATED ON OR NO MORE THAN 3 FT AWAY FROM SERVICE DISCONNECTING MEANS TO WHICH THE PV SYSTEMS ARE CONNECTED AND SHALL INDICATE THE LOCATION OF ALL IDENTIFIED RAPID SHUTDOWN SWITCHES IF NOT AT THE SAME LOCATION.
[NEC 690.56(C)(1)(B)]

LABELING DIAGRAM:

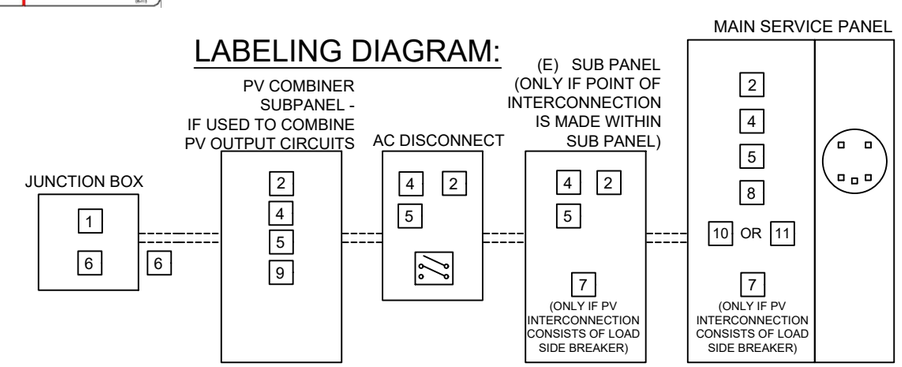

** ELECTRICAL DIAGRAM SHOWN ABOVE IS FOR LABELING PURPOSES ONLY. NOT AN ACTUAL REPRESENATION OF EQUIPMENT AND CONNECTIONS TO BE INSTALLED. LABEL LOCATIONS PRESENTED MAY VERY DEPENDING ON TYPE OF INTERCONNECTION METHOD AND LOCATION PRESENTED ELECTRICAL DIAGRAM PAGE. **

LABELING NOTES:
1. LABELS CALLED OUT ACCORDING TO ALL COMMON CONFIGURATIONS. ELECTRICIAN TO DETERMINE EXACT REQUIREMENTS IN THE FIELD PER CURRENT NEC AND LOCAL CODES AND MAKE APPROPRIATE ADJUSTMENTS.
2. LABELING REQUIREMENTS BASED ON THE 2017 NATIONAL ELECTRIC CODE, OSHA STANDARD 19010.145, ANSI Z535.
3. MATERIAL BASED ON THE REQUIREMENTS OF THE AUTHORITY HAVING JURISDICTION.
4. LABELS TO BE OF SUFFICIENT DURABILITY TO WITHSTAND THE ENVIRONMENT INVOLVED [NEC 110.21]
5. LABELS TO BE A MINIMUM LETTER HEIGHT OF 3/8", WHITE ON RED BACKGROUND; REFLECTIVE, AND PERMANENTLY AFFIXED [IFC 605.11.1.1]

Sunburn Construction

CONTRACTOR INFORMATION:
Sunburn Construction
6720 Fairhaven Road
Madison, WI 53719
License# DCQ-111802116

SITE INFORMATION:
Andy Smith
601 Dale Court, Cross Plains , Wisconsin 53528
AC SYSTEM SIZE: 4.2 kW AC
DC SYSTEM SIZE: 3.9 kW DC

(13) Heliene 60M-HBLK 300 PV MODULES
(7) AP Systems YC600 INVERTER(S)

DATE: November 8, 2019

PAGE:	SHEET NAME:
PV08	PLACARD
DRAWN BY: SoloCAD	VERSION: 0

CAUTION

POWER TO THIS BUILDING IS ALSO SUPPLIED FROM ROOF MOUNTED SOLAR ARRAYS WITH SAFETY DISCONNECTS AS SHOWN:

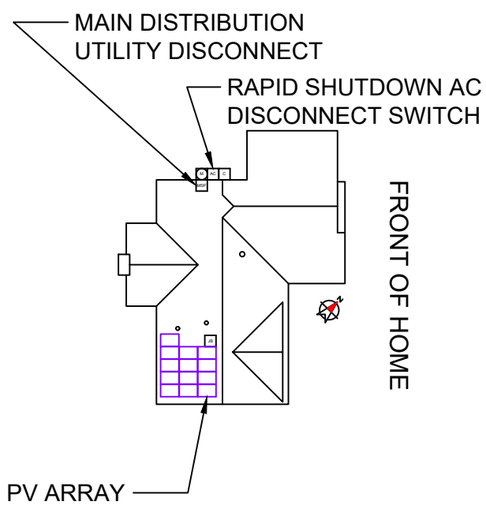

601 Dale Court, Cross Plains Wisconsin 53528

DIRECTORY

PERMANENT PLAQUE OR DIRECTORY PROVIDING THE LOCATION OF THE SERVICE DISCONNECTING MEANS AND THE PHOTOVOLTAIC SYSTEM.

(ALL PLAQUES AND SIGNAGE WILL BE INSTALLED AS OUTLINED WITHIN: NEC 690.56(B)&(C), [NEC 705.10])

Sunburn Construction

CONTRACTOR INFORMATION:
Sunburn Construction
6720 Fairhaven Road
Madison, WI 53719
License# DCQ-111802116

SITE INFORMATION:
Andy Smith
601 Dale Court, Cross Plains , Wisconsin 53528
AC SYSTEM SIZE: 4.2 kW AC
DC SYSTEM SIZE: 3.9 kW DC

(13) Heliene 60M-HBLK 300 PV MODULES
(7) AP Systems YC600 INVERTER(S)

DATE: November 8, 2019

PAGE:	SHEET NAME:
PV09	SITE PHOTOS
DRAWN BY: SoloCAD	VERSION: 0

SITE PHOTOS:

MONO POLY

HELIENE

60M-HBLK

60-CELL MONOCRYSTALLINE MODULE

305 Wp
MAX POWER OUPUT

18.6%
MAX EFFICIENCY

10 YEAR
PRODUCT WARRANTY

25 YEAR
LINEAR PERFORMANCE GUARANTEE

MADE WITH PRIDE IN North America BUY LOCAL

- H-BLACK INTEGRATION - BLACK FRAME & BACKSHEET
- PERFECT FOR HIGH VISIBILITY INSTALLATIONS
- MANUFACTURED ACCORDING TO INTERNATIONAL QUALITY SYSTEM STANDARDS: ISO9001
- GUARANTEED POSITIVE POWER SORTING: [-0 : +4.99 WP]

HELIENE INC. IS A PREMIER SOLAR MODULE MANUFACTURER, SERVICING THE GROWING SOLAR ENERGY MARKETS OF NORTH AMERICA.

COMBINING PROVEN EUROPEAN TECHNOLOGY WITH NORTH AMERICAN INGENUITY ALLOWS HELIENE TO MAKE A REAL COMMITMENT IN PROVIDING SMARTER ENERGY CHOICES FOR THE FUTURE.

HELIENE
www.heliene.com

LINEAR PERFORMANCE GUARANTEE

10 YEAR WORKMANSHIP WARRANTY • 25 YEAR LINEAR PERFORMANCE GUARANTEE

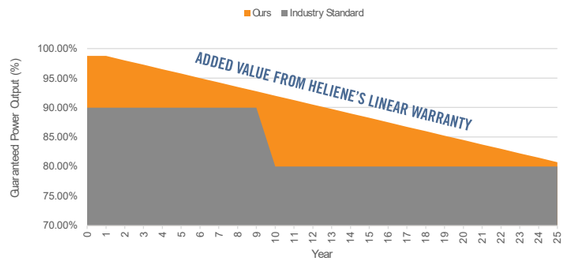

60M

DIMENSIONS FOR HELIENE 60M SERIES MODULES

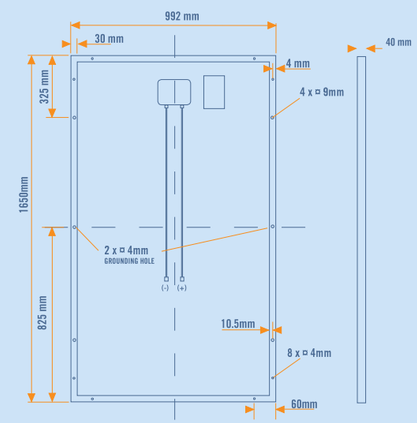

I-V CURVE FOR HELIENE 60M SERIES

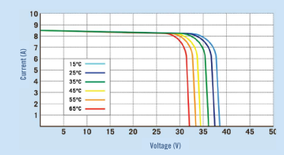

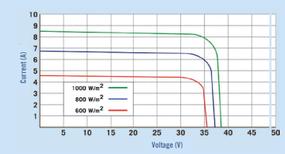

CERTIFICATIONS

Intertek

ISO 9001

ELECTRICAL DATA (STC)

Peak Rated Power	P_{mpp} (W)	305	300	295	290	285
Maximum Power Voltage	V_{mpp} (V)	33.44	33.40	32.84	32.54	32.24
Maximum Power Current	I_{mpp} (A)	9.20	9.13	9.06	8.99	8.92
Open Circuit Voltage	V_{oc} (V)	39.98	39.83	39.68	39.53	39.38
Short Circuit Current	Isc (A)	9.67	9.59	9.51	9.42	9.34
Module Efficiency *	Eff (%)	18.6	18.3	18.0	17.7	17.4
Maximum Series Fuse Rating	MF (A)	20	15	15	15	15
Power Output Tolerance	[- 0 , + 4.99] Wp					

STC - Standard Test Conditions: Irradiation 1000 W/m2 - Air mass AM 1.5 - Cell temperature 25 °C
* Calculated using maximum power based on full positive output tolerance [-0 , +4.99] Wp

MECHANICAL DATA

Dimensions (L x W x D)	1650 x 992 x 40 mm (65 x 39 x 1.6 inch)
Weight*	19.9 kg (43.9 lbs)
Output Cables	1.0 m (39.4 inch) symmetrical cables with MC4 type connectors
Junction Box	IP-67 rated with bypass diodes
Frame	Double webbed 15 micron anodized aluminum alloy
Front Glass	Low-iron content, high-transmission PV solar glass
Solar Cells	60 Monocrystalline cells (156 x 156 mm)

* Calculated using 3.2mm PV glass, if 4mm profile is requested weight load will vary

CERTIFICATIONS

UL Certification	ULC/ORD-C1703-1, UL1703
IEC Certification	Optional

All Heliene modules are certified under the California Energy Commision (CEC) Listing Report

TEMPERATURE RATINGS

Nominal Operating Cell Temperature (NOCT)	+45°C (±2°C)
Temperature Coefficient of P_{max}	-0.39%/°C
Temperature Coefficient of V_{oc}	-0.31%/°C
Temperature Coefficient of I_{sc}	0.045%/°C

MAXIMUM RATINGS

Operational Temperature	-40°C - +85°C
Max System Voltage	1000V (*1500V) *Optional

WARRANTY

10 Year Manufacturer's Workmanship Warranty
25 Year Linear Power Guarantee

(Refer to product warranty page for details)

PACKAGING CONFIGURATION

Modules per box:	26 pieces
Modules per 53' trailer:	936 pieces

HELIENE60MBLK_JFD_1701-Rev.03

HELIENE

CAUTION: READ SAFETY AND INSTALLATION INSTRUCTIONS BEFORE USING THE PRODUCT.
Specifications included in this datasheet are subject to change without notice.

APsystems YC600 Microinverter Datasheet

INPUT DATA (DC)

Module Compatibility	60 & 72 Cell PV Modules
MPPT Voltage Range	22V-48V
Operation Voltage Range	16V-55V
Maximum Input Voltage	55V
Maximum Input Current	12A x 2
Maximum Total PV Array Short Circuit Current	15A

OUTPUT DATA (AC)

	240V	208V
Maximum Continuous Output Power	548VA	548VA
Peak Output Power	600VA	600VA
Nominal Output Voltage	240V	208V
Nominal Output Current	2.28A	2.63A
Nominal Output Frequency	60Hz	60Hz
Adjustable Output Voltage Range	211-264V	183-229V
Adjustable Output Frequency Range	59.3 - 60.5Hz	59.3 - 60.5Hz
Power Factor (Adjustable)	0.8 leading...0.8 lagging	0.8 leading...0.8 lagging
Total Harmonic Distortion	<3%	<3%
Maximum Units per Branch	7 (14 PV modules)	6 (12 PV modules)

EFFICIENCY

Peak Efficiency	96.7%
CEC Weighted Efficiency	96.5%
Nominal MPPT Efficiency	99.5%
Night Power Consumption	60mW

MECHANICAL DATA

Operating Ambient Temperature Range	-40°F to +149°F (-40°C to +65°C)
Storage Temperature Range	-40°F to +185°F (-40°C to +85°C)
Dimensions (WxHxD) inches	10.24" x 7.4" x 1.24"
Dimensions (WxHxD) mm	260mm x 188mm x 31.5mm
Weight	5.7 lbs (2.6kg)
AC BUS Maximum Current	20A
Connector Type	MC4 Type
Enclosure Rating	NEMA 6 (IP67)
Cooling	Natural Convection - No Fans

FEATURES & COMPLIANCE

Communication	Wireless Zigbee
Transformer Design	High Frequency Transformers, Galvanic Isolation
Monitoring	Via EMA**Online Portal
Emissions & Immunity (EMC) Compliance	FCC PART 15, ANSI C63.4, ICES-003
Safety & Grid Connection Compliance	UL1741, UL1741 SA (240V version only), CA Rule 21 (240V version only), IEEE1547, CSA C22.2 No.107.1-01, NEC 2017 690.12, 690.11

* Depending on the local regulations.
**APsystems online Energy Management Analysis (EMA) platform

Specifications subject to change without notice – please ensure you are using the most recent version found at APsystems.com

2.11.19 © All Rights Reserved

600 Ericksen Ave NE, Suite 200, Seattle, WA 98110 | 844.666.7035 | APsystems.com

APsystems
ALTENERGY POWER

Leading the Industry in
Solar Microinverter Technology

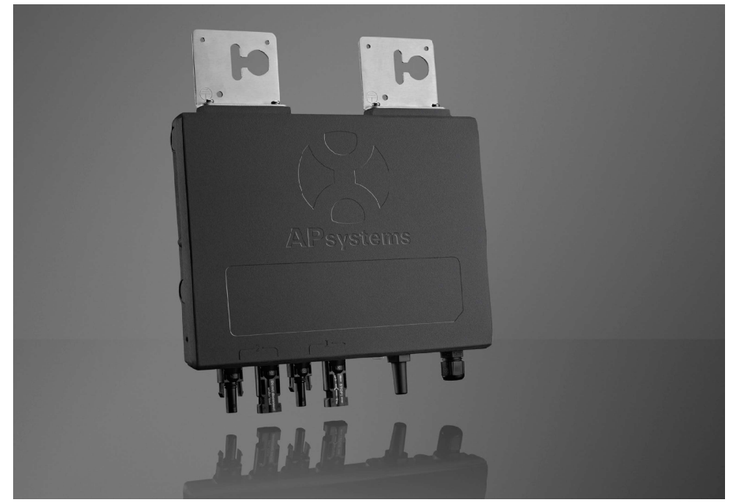

YC600
Microinverter

- Dual-module microinverter with independent MPPT
- Utility-interactive with Reactive Power Control (RPC)
- CA Rule 21 compliant
- Continuous power of 274VA per channel, 300VA peak
- Accommodates modules from 250-365W+
- Wide MPPT voltage range (22V-48V)
- Meets NEC 2014/2017 690.12 Rapid Shutdown requirements
- ZigBee communication & free monitoring

DIMENSIONS

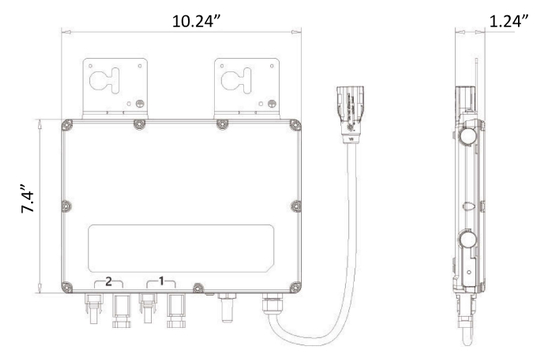

With its groundbreaking design and features, the YC600 is the pinnacle of microinverter technology. A single-phase, smart grid-compliant microinverter, the YC600 serves two modules with dual, independent MPPT. Zigbee wireless communication over a mesh network offers faster data speeds than PLC and a wider MPPT voltage range results in a greater energy harvest for homeowners.

A true utility-interactive microinverter with Reactive Power Control (RPC) technology, the YC600 meets CA Rule 21 requirements and is inherently NEC 2014/2017 Rapid Shutdown compliant. The unit also builds on the successful APsystems line of multi-module microinverters, simplifying installation and reducing logistics costs.

WIRING SCHEMATIC

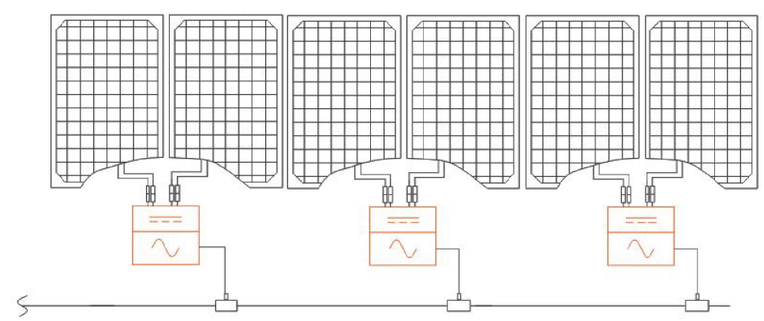

IRONRIDGE

XR Rail Family

Solar Is Not Always Sunny

Over their lifetime, solar panels experience countless extreme weather events. Not just the worst storms in years, but the worst storms in 40 years. High winds capable of ripping panels from a roof, and snowfalls weighing enough to buckle a panel frame.

XR Rails are the structural backbone preventing these results. They resist uplift, protect against buckling and safely and efficiently transfer loads into the building structure. Their superior spanning capability requires fewer roof attachments, reducing the number of roof penetrations and the amount of installation time.

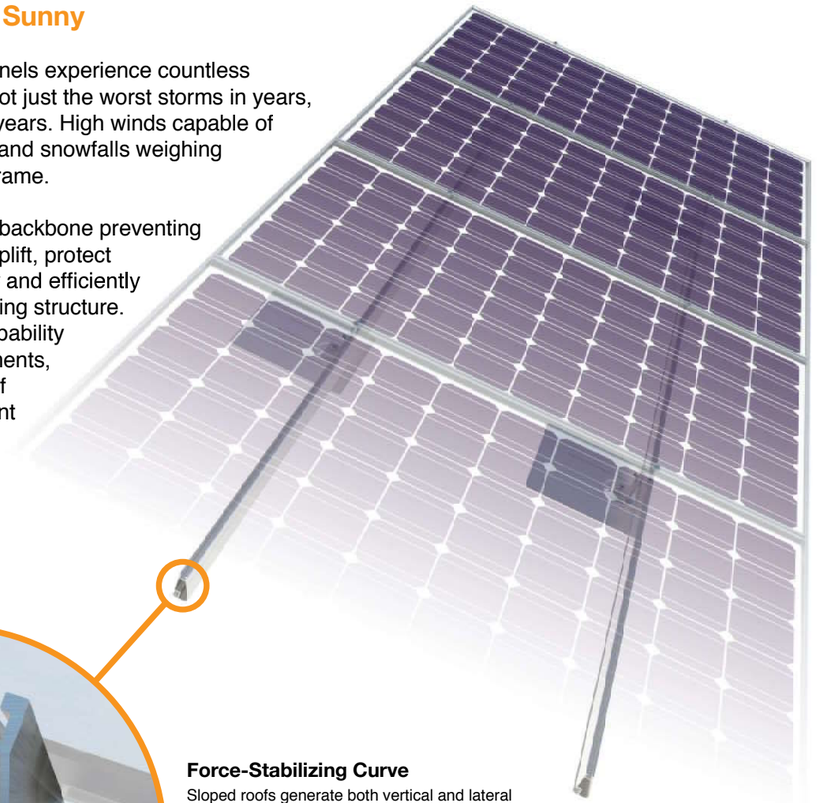

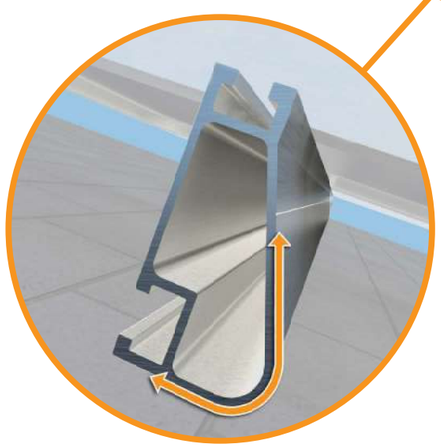

Force-Stabilizing Curve

Sloped roofs generate both vertical and lateral forces on mounting rails which can cause them to bend and twist. The curved shape of XR Rails is specially designed to increase strength in both directions while resisting the twisting. This unique feature ensures greater security during extreme weather and a longer system lifetime.

Compatible with Flat & Pitched Roofs

XR Rails are compatible with FlashFoot and other pitched roof attachments.

IronRidge offers a range of tilt leg options for flat roof mounting applications.

Corrosion-Resistant Materials

All XR Rails are made of 6000-series aluminum alloy, then protected with an anodized finish. Anodizing prevents surface and structural corrosion, while also providing a more attractive appearance.

Tech Brief

XR Rail Family

The XR Rail Family offers the strength of a curved rail in three targeted sizes. Each size supports specific design loads, while minimizing material costs. Depending on your location, there is an XR Rail to match.

XR10

XR10 is a sleek, low-profile mounting rail, designed for regions with light or no snow. It achieves 6 foot spans, while remaining light and economical.

- 6' spanning capability
- Moderate load capability
- Clear & black anodized finish
- Internal splices available

XR100

XR100 is the ultimate residential mounting rail. It supports a range of wind and snow conditions, while also maximizing spans up to 8 feet.

- 8' spanning capability
- Heavy load capability
- Clear & black anodized finish
- Internal splices available

XR1000

XR1000 is a heavyweight among solar mounting rails. It's built to handle extreme climates and spans 12 feet or more for commercial applications.

- 12' spanning capability
- Extreme load capability
- Clear anodized finish
- Internal splices available

Rail Selection

The following table was prepared in compliance with applicable engineering codes and standards. Values are based on the following criteria: ASCE 7-10, Roof Zone 1, Exposure B, Roof Slope of 7 to 27 degrees and Mean Building Height of 30 ft. Visit IronRidge.com for detailed span tables and certifications.

Load		Rail Span					
Snow (PSF)	Wind (MPH)	4'	5' 4"	6'	8'	10'	12'
None	100	XR10		XR100		XR1000	
	120						
	140						
	160						
10-20	100						
	120						
	140						
	160						
30	100						
	160						
40	100						
	160						
50-70	160						
80-90	160						

© 2014 IronRidge, Inc. All rights reserved. Visit www.ironridge.com or call 1-800-227-9523 for more information. Version 1.13

IRONRIDGE

FlashFoot2

The Strongest Attachment in Solar

IronRidge FlashFoot2 raises the bar in solar roof protection. The unique water seal design is both elevated and encapsulated, delivering redundant layers of protection against water intrusion. In addition, the twist-on Cap perfectly aligns the rail attachment with the lag bolt to maximize mechanical strength.

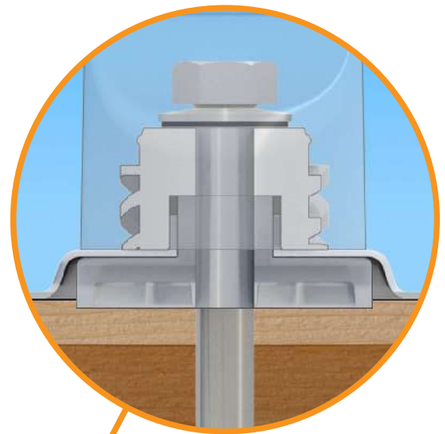

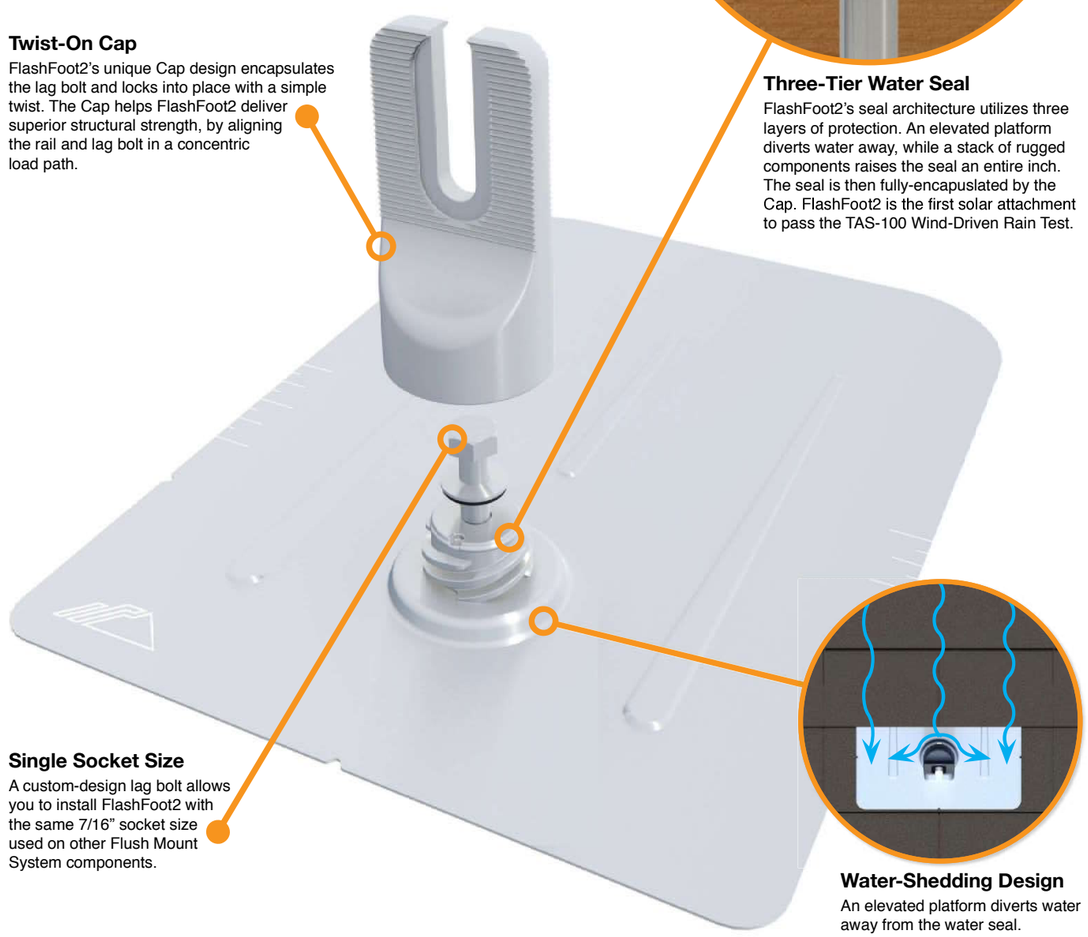

Twist-On Cap

FlashFoot2's unique Cap design encapsulates the lag bolt and locks into place with a simple twist. The Cap helps FlashFoot2 deliver superior structural strength, by aligning the rail and lag bolt in a concentric load path.

Three-Tier Water Seal

FlashFoot2's seal architecture utilizes three layers of protection. An elevated platform diverts water away, while a stack of rugged components raises the seal an entire inch. The seal is then fully-encapuslated by the Cap. FlashFoot2 is the first solar attachment to pass the TAS-100 Wind-Driven Rain Test.

Single Socket Size

A custom-design lag bolt allows you to install FlashFoot2 with the same 7/16" socket size used on other Flush Mount System components.

Water-Shedding Design

An elevated platform diverts water away from the water seal.

Tech Brief

Installation Features

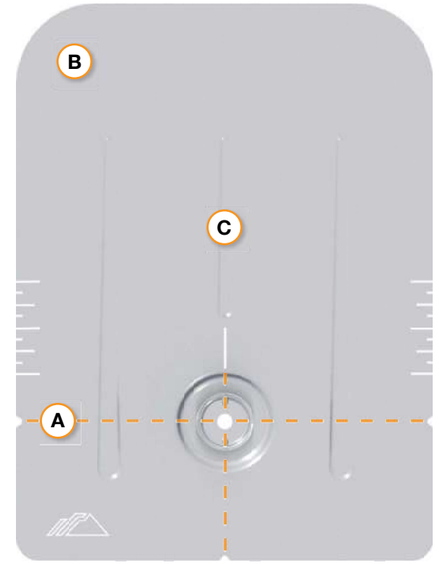

A Alignment Markers

Quickly align the flashing with chalk lines to find pilot holes.

B Rounded Corners

Makes it easier to handle and insert under the roof shingles.

C Reinforcement Ribs

Help to stiffen the flashing and prevent any bending or crinkling during installation.

Benefits of Concentric Loading

Traditional solar attachments have a horizontal offset between the rail and lag bolt, which introduces leverage on the lag bolt and decreases uplift capacity.

FlashFoot2 is the only product to align the rail and lag bolt. This concentric loading design results in a stronger attachment for the system.

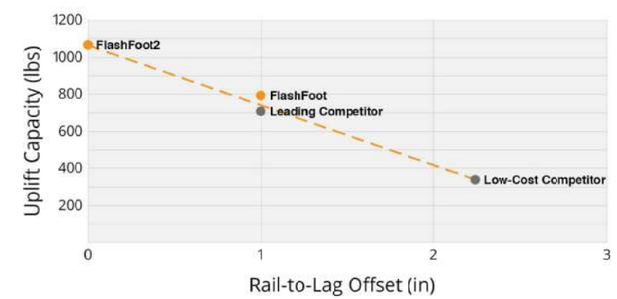

Testing & Certification

Structural Certification

Designed and Certified for Compliance with the International Building Code & ASCE/SEI-7.

Water Seal Ratings

Water Sealing Tested to UL 441 Section 27 "Rain Test" and TAS 100-95 "Wind Driven Rain Test" by Intertek. Ratings applicable for composition shingle roofs having slopes between 2:12 and 12:12.

UL 2703

Conforms to UL 2703 Mechanical and Bonding Requirements. See Flush Mount Install Manual for full ratings.

© 2016 IronRidge, Inc. All rights reserved. Visit www.ironridge.com or call 1-800-227-9523 for more information. Version 1.0

Dept of Safety & Professional Services Industry Services Division Wisconsin Stats. 101.63, 101.73	**Wisconsin Uniform Building Permit Application** **Instructions on back of second ply.** The information you provide may be used by other government agency programs [(Privacy Law, s. 15.04 (1)(m)]	Application No. Parcel No.

PERMIT REQUESTED	☐ Constr. ☐ HVAC ☐ Electric ☐ Plumbing ☐ Erosion Control ☒ Other: PV Solar			
Owner's Name Andy Smith	Mailing Address 601 Dale Court	Email: andy.smith@nobletc.com	Tel. (608) 212-0959	

Contractor Name & Type	Lic/Cert#	Exp Date	Mailing Address	Tel. & Email
Dwelling Contractor (Constr.) Sunburn Construction, LLC	DC-1118 02134	11/16/20	6720 Fairhaven Road Madison, WI 53719	850-960-2339 projectmanagement@everlightsolar.com
Dwelling Contr. Qualifier Sunburn Construction, LLC	DCQ-111 802116	11/16/20	The Dwelling Contr. Qualifier shall be an owner, CEO, COB or employee of the Dwelling Contr.	850-960-2339 projectmanagement@everlightsolar.com
HVAC				
Electrical Contractor MC Operations, LLC	CL-1490 605	6/30/23	W3737 Kreuger Road Monticello, WI 53570	608-206-6863 projectmanagement@everlightsolar.com
Electrical Master Electrician				
Plumbing				

PROJECT LOCATION	Lot area 234.78 Sq.ft.	☐ One acre or more of soil will be disturbed	☒ Town ☐ Village ☐ City of Cross Plains	____ 1/4, ____ 1/4, of Section ____, T ____N, R ____ E/W

Building Address	County	Subdivision Name	Lot No.	Block No.
601 Dale Court	Dane	ST. FRANCIS ADD TO THE VILLAGE OF CROSS PLAINS	65	

Zoning District(s)	Zoning Permit No.	**Setbacks:**	Front ft.	Rear ft.	Left ft.	Right ft.

1. PROJECT ☐ New ☐ Alteration ☐ Addition ☐ Repair ☐ Raze ☐ Move ☒ Other PV Solar

2. AREA INVOLVED (sq ft)	Unit 1	Unit 2	Total
Unfin. Bsmt.			
Living Area			
Garage			
Deck/Porch			
Totals			

3. OCCUPANCY ☒ Single Family ☐ Two Family ☐ Garage ☐ Other **4. USE** ☐ Seasonal ☐ Permanent ☐ Other:

5. CONSTRUCTION TYPE ☐ Site Built ☐ Mfd. Per WI UDC ☐ Mfd. Per US HUD

6. STORIES ☐ 1-Story ☐ 2-Story ☐ Other: ☐ Plus Basement **7. EST. BUILDING COST w/o LAND** $

8. WALLS ☐ Wood Frame ☐ Steel ☐ ICF ☐ Timber/Pole ☐ Other **9. ELECTRIC** Panel Amps: ____ ☐ Underground ☐ Overhead

10. SEWER ☐ Municipal ☐ Sanitary Permit # **11. WATER** ☐ Municipal ☐ On-Site Well

I understand that I: am subject to all applicable codes, laws, statutes and ordinances, including those described on the reverse side of the last ply of this form; am subject to any conditions of this permit; understand that the issuance of this permit creates no legal liability, express or implied, on the state or municipality; and certify that all the above information is accurate. If one acre or more of soil will be disturbed, I understand that this project is subject to ch. NR 151 regarding additional erosion control and stormwater management and the owner shall sign the statement on the back of the permit if not signing below. I expressly grant the building inspector, or the inspector's authorized agent, permission to enter the premises for which this permit is sought at all reasonable hours and for any proper purpose to inspect the work which is being done.

☐ **I vouch that I am or will be an owner-occupant of this dwelling for which I am applying for an erosion control or construction permit without a Dwelling Contractor Certification and have read the cautionary statement regarding contractor responsibility on the reverse side of the last ply of this form.**

APPLICANT (Print:) Kylie Gillis **Sign:** K Gillis **DATE** 11/13/19

APPROVAL CONDITIONS This permit is issued pursuant to the following conditions. Failure to comply may result in suspension or revocation of this permit or other penalty. ☐ **See attached for conditions of approval.**

ISSUING JURISDICTION	☐ Town of ☐ Village of ☐ City of	☐ County of ☐ State	State-Contracted Inspection Agency#:	Municipality Number of Dwelling Location ____ ____ - ____ ____ ____

FEES:		**PERMIT(S) ISSUED**	**WIS PERMIT SEAL #**	**PERMIT ISSUED BY:**
Plan Review	$	☐ Construction		Name ____
Inspection	$	☐ HVAC		Date ____ Tel. ____
Wis. Permit Seal	$	☐ Electrical		Cert No. ____
Other	$	☐ Plumbing		Email: ____
Total	$	☐ Erosion Control		

SBD-5823(R1/17) Distribute: ☐ Ply 1 – Issuing Jurisdiction; ☐ Ply 2- Issuer forwards to state w/in 30 days; ☐ Ply 3- Inspector; ☐ Ply 4- Applicant